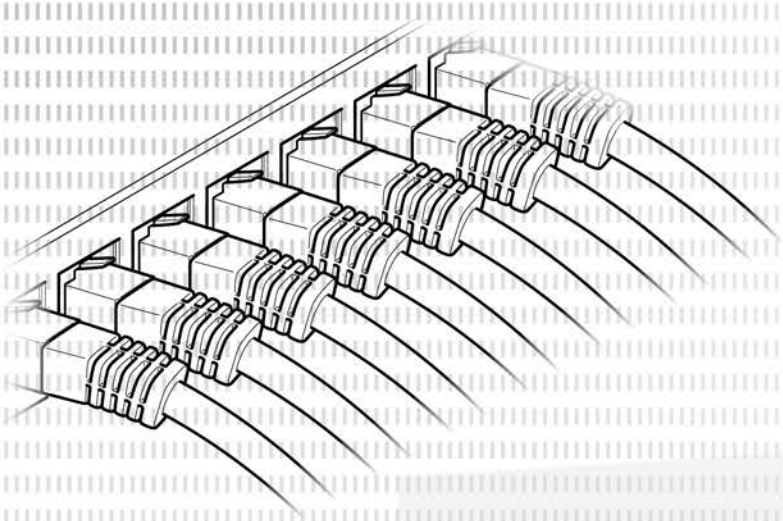

CiA 402

CANopen®

AG 0103 – en

Drive Profile-DS402

Functional Description

NORD® DRIVESYSTEMS

Documentation

Title:	**AG 0103**	
Order No.:	**6047802**	
Series:	SK 500P	
Frequency inverter series:	SK 500P, SK 510P, SK 530P, SK 550P	
Device types:	**SK 5xxP-250-123-A... SK 5xxP-221-123-A**	(0.25 - 2.2 kW, 1 ~ 200 - 240 V)
	SK 5xxP-250-340-A... SK 5xxP-551-340-A	(0.25 - 5.5 kW, 3 ~ 380 - 480 V)

Version list

Title, Date	Order number	Remarks
AG 0103, Sept. 2020	**6047802**/ 3320	First edition, based on the current manuals BU 0600 DE/ 1020, BU 2200 DE/ 3419, BU 2300 DE/ 3619, BU 2500 DE/ 3419
AG 0103, July. 2023	**6047802**/ 3023	several corrections

Table 1: Version list AG 0103

Publisher

Getriebebau NORD GmbH & Co. KG
Getriebebau-Nord-Straße 1 • 22941 Bargteheide, Germany • http://www.nord.com
Fon +49 (0) 45 32 / 289-0 • Fax +49 (0) 45 32 / 289-2253

Member of the NORD DRIVESYSTEMS Group

General information

Copyright

Right of modification

NORD GmbH & Co. KG reserves the right to amend the contents of the application descriptions at any time without prior notice.

Completeness and correctness

This application description is not binding and does not claim to be complete with regard to the structure and parameterisation of components.

Every care has been taken to ensure that the contents of this application description are correct. However, in case of deviations between the application description and other documentation (e.g. Manuals) the content of the other documentation has priority.

NOTICE	**Application**
This application example is only valid in combination with the operating instructions of the respective frequency inverters and technology options. This is an essential prerequisite for the availability of all the relevant information required for the safe commissioning of the frequency inverter.	

Exclusion of liability

This application document is an aid for the installation and parameterisation of an application with NORD products. The description is based on an example for a specific application and can be used as orientation for comparable applications.

As this is an example, Getriebebau NORD GmbH & Co. KG does not accept any liability for injury or material damages and does not grant any warranty, either explicitly or implicitly with regard to the information contained in this application description.

Information about this guide

This function description is intended for salespersons, planners, as well as commissioning and service personnel who are familiar with using the functions of electronic drive technology (motors and frequency inverters) from Getriebebau NORD.

This function description initially gives a brief overview of the functions themselves. In addition, further information for application and use is given.

The information and recommendations relate to currently available drive and control components or settings, preferably standard products from Getriebebau NORD. This guideline relates to the current drive technology software and hardware versions which were valid at the time of publication of the guideline.

Table of Contents

List of illustrations

1 The DES402 drive profile

The DS402 drive profile was specially developed for the field of motion control. It standardises both communication, as well as the behaviour of various drive units. This in turn enables e.g. simple integration of a new drive into an existing project or enables the use of existing software modules.

The internal and external behaviour of the drives are determined by the standardised status machine and the standardised operating modes. For this, the drives communicate with the higher level controller via specified process data objects (PDOs) and service data objects (SDOs). Standardised messages, “Emergency messages” are also available. Further details regarding bus communication can be found in the relevant supplementary instructions for the bus interface (🕮 EtherCAT BU2300, 🕮 CANopen BU2500)

Even in its basic configuration, NORDAC *PRO* supports the DS402 drive profile via CANopen. In addition, with model SK 550P, the DS402 drive profile can also be used via EtherCAT bus systems.

Only the following operating modes are available for operation of the NORDAC *PRO* using the DS402 drive profile:

- Profile Position (Position and orientation control)
- Velocity (Speed control with minimum and maximum speeds)
- Profile Velocity (Speed control without minimum and maximum speeds)
- Profile Torque (Torque control)
- Homing (Reference run)

NC axes and other typical Beckhoff functions, such as function blocks for synchronous movements of multi-axis systems, are not supported by NORD.

The DS402 drive profile supplements the functions of the NORDAC *PRO*. However, it must be noted that the scope of functions of the frequency inverter is restricted by use of the profile. For example, multiple frequency inverters can no longer be linked via the system bus. This therefore excludes master/slave applications via the system bus. These include synchronisation control such as in the “Flying saw” function.

Furthermore, the drive cannot be controlled via the PLC using the DS402 drive profile. Only the setpoint and actual values can be processed via the PLC.

2 General information

A standardised control and status word is available for communication with the DS402 drive profile. With these, specified bits are used to operate the drive. In addition, the standard also specifies freely configurable bits. These are used by NORD for switching parameter sets and as freely parameterised NORD User Bits.

Setpoint and actual values are also specified as objects in the DS402 drive profile. For this reason, additional DS402 parameters are defined for NORD frequency inverters. These are only used in the DS402 operating modes.

2.1 Frequency inverter status machine

The frequency inverter is controlled by an internal status machine. Changes between various states are triggered automatically or by control commands in the process data control word. The present status is returned in the process data status word.

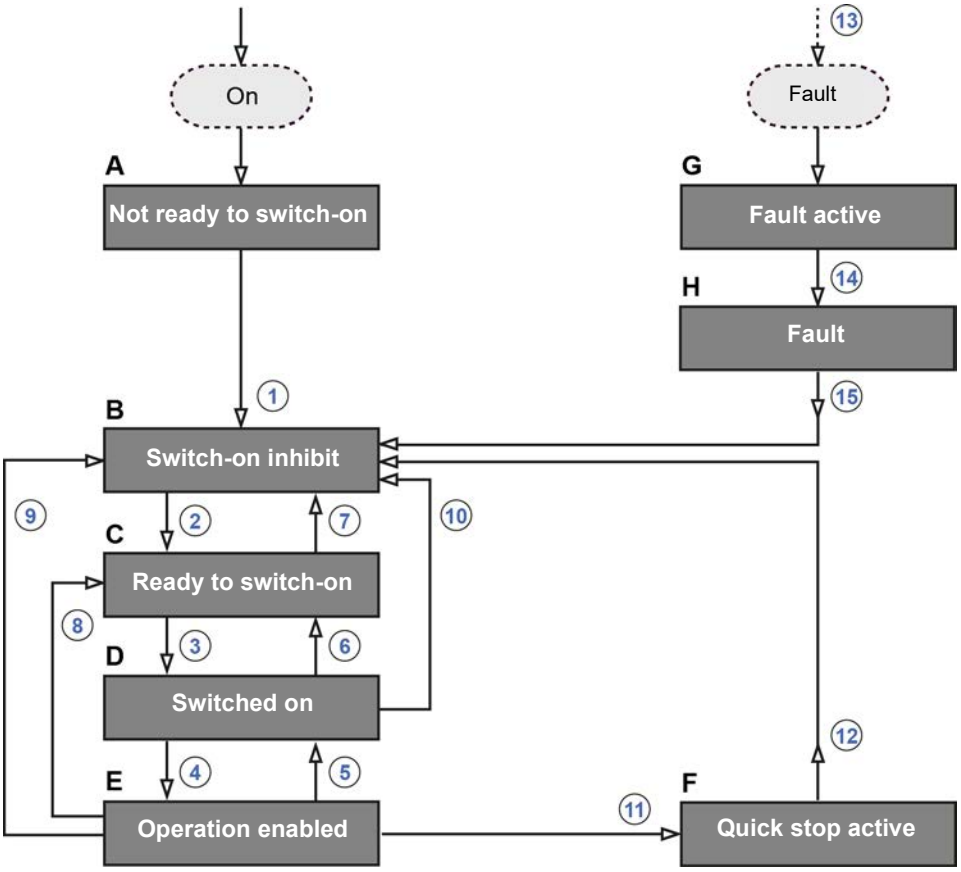

Figure 1: Frequency inverter status machine

Item	Meaning
A…H	Frequency inverter statuses (🕮 Table "**Frequency inverter statuses"**)
1…15	Status transitions (🕮 Table "**Status transitions"**)

Frequency inverter statuses

Status		Description
A	Not ready to switch-on	Initial state after switching on the frequency inverter. As soon as the loading relay engages, the frequency inverter automatically changes to the status "Switch-on inhibit".
B	Switch-on inhibit	Second status after switching on the frequency inverter, which can only be exited with the control command "Shut-down". The charging relay is switched on.
C	Ready to switch-on	In this status, initialisation of the frequency inverter is complete. The output voltage is blocked. **Information** During the initialisation process the response to a bus master telegram does not yet contain the response to the control command which has been issued. On the basis of the response from the bus participant, the control system must determine whether the control command has been executed.
D	Switched on	Frequency inverter ready for operation.
E	Operation enabled	The frequency inverter receives and processes setpoint values.
F	Quick stop active	The emergency stop function is being executed (the drive is stopped), and the frequency inverter changes to the status "Switch-on inhibit".
G	Fault active	If an error occurs, the frequency inverter changes to this status and all functions are blocked.
H	Fault	After processing of the response to the fault (fault active) the frequency inverter changes to this status, which can only be exited with the control command "Acknowledge fault".

Status transitions

Triggered status transition		Control command	Bit 7…0 of the control word[1]				
			7	3	2	1	0
1	From "Not ready to switch-on" to "Switch on inhibit"	—	—				
	Automatic activation of the charging relay						
2	From "Switch-on inhibit" to "Ready to switch-on"	Shut down	0	X	**1**	**1**	**0**
3	From "Ready to switch-on" to "Switched on"	Switch on	0	X	**1**	**1**	**1**
4	From "Switched on" to "Operation enabled"	Enable operation	0	**1**	**1**	**1**	**1**
	Output voltage is enabled						
5	From "Operation enabled" to "Switched on"	Disable operation	0	**0**	**1**	**1**	**1**
	The output voltage is disabled						
6	From "Switched on" to "Ready to switch-on"	Shut down	0	X	**1**	**1**	**0**
	Voltage enabled at "f = 0 Hz"						
7	From "Ready to switch-on" to "Switch-on inhibit"	Disable voltage	0	X	X	**0**	X
		Quick stop	0	X	**0**	**1**	X
8	From "Operation enabled" to "Ready to switch-on"	Shut down	0	X	**1**	**1**	**0**
9	From "Operation enabled" to "Switch on inhibit"	Disable voltage	0	X	X	**0**	X
10	From "Switched on" to "Switch on inhibit"	Disable voltage	0	X	X	**0**	X
		Quick stop	0	X	**0**	**1**	X
11	From "Operation enabled" to "Quick stop active"	Quick stop	0	X	**0**	**1**	X
12	From "Quick stop active" to "Switch on inhibit"	Disable voltage	0	X	X	**0**	X
13	Automatically, after the occurrence of a fault from any status	—	—				
14	Automatically, after completion of the fault response (“Fault active”)	—	—				
15	End fault	Acknowledge error	**0**	X	X	X	X
			→				
			1	X	X	X	X

X = The bit status (0 or 1) is not important for achieving the status. Please also note the list of control bits, 🕮 Section 2.2 "Control word ".

[1] Complete list of control bits (Bit 0…15) 🕮 Section 2.2 "Control word ".

Decoded frequency inverter statuses

Status	Status bit[1]						
	6	5	4	3	2	1	0
Not ready to switch-on	0	X	X	0	0	0	0
Switch-on inhibit	1	X	X	0	0	0	0
Ready to switch-on	0	1	X	0	0	0	1
Switched on	0	1	X	0	0	1	1
Operation enabled	0	1	X	0	1	1	1
Fault	0	X	X	1	0	0	0
Fault active	0	X	X	1	1	1	1
Quick stop active	0	0	X	0	1	1	1

[1] Complete list of status bits (Bit 0…15) 📖 Section 2.3 "Status word".

2.2 Control word

The control word (CTW) enables the bus master to control the frequency inverter. It must therefore be sent to the frequency inverter via a process data telegram from the bus master (order telegram). For this reason it is necessary to map DS402 object 6040h into one of the process telegrams (see 🕮 Section 4 "PDO mapping ").

Bit	Designation	Value	Control command
0	Ready	0	Reverse running with braking ramp, voltage enabled at f = 0 Hz (ready for operation).
		1	Set the frequency inverter as ready for operation
1	Disable voltage	0	Switch off the frequency inverter output voltage (the frequency inverter goes into the state “Switch-on inhibit”).
		1	Cancel “Block voltage“.
2	Quick stop	0	Quick stop with programmed quick stop time. Voltage enabled at f = 0 Hz (the frequency inverter goes into the status “Switch-on inhibit”).
		1	Cancel the operating condition “Quick stop”.
3	Enable operation	0	Voltage disable: Switch off the frequency inverter output voltage (the frequency inverter goes into the state “Ready to switch on”).
		1	Enable output voltage. Acceleration of the frequency inverter to the present set point.
4	Depending on operating modes		See section “Operating modes”
5			See section “Operating modes”
6			See section “Operating modes”
7	Acknowledge error (0→1)	0	With the change from 0 to 1, faults which are no longer active are acknowledged.
		1	**Note:** If a digital input has been programmed for the "Ack.fault" function, this bit must not be permanently set to 1 via the bus, as otherwise flank evaluation would be prevented.
8	Stop	0	The motor accelerates to the target speed with the ramp which is set for the particular operating mode.
		1	The motor is shut down with the set braking ramp. See parameter **P30**
9	Not used		
10	Not used		
11	Not used		
12	Start function 480.11	0	
		1	Bus bit 8 of the control word is set 🕮 Parameter **P480** BU0600.
13	Start function 480.12	0	
		1	Bus bit 9 of the control word is set 🕮 Parameter **P480** BU0600.
14	Parameter set Bit 0 On	0	
		1	
15	Parameter set Bit 1 On	0	
		1	

Bit 15	Bit 14	Activated parameter set
0	0	Parameter set 1
0	1	Parameter set 2
1	0	Parameter set 3
1	1	Parameter set 4

2.3 Status word

The status of the frequency inverter is reported to the bus master with the status word. For this, DS402 object 6041h must be mapped into a process data telegram from the frequency inverter to the bus master. During planning, the status word should therefore be mapped into one of the process data telegrams (see 🕮 Section 4 "PDO mapping ").

Bit	Meaning	Value	Status message
0	Ready to switch-on	0	
		1	Initialisation completed, charging relay switched on, output voltage disabled.
1	Ready	0	Switch-on command not present, or fault present, or the command “Disable voltage”, “Quick stop”, or the status “Switch-on inhibit” is present.
		1	Switch-on command is present and there is no fault present. The frequency inverter can start on the command “Operation enabled”
2	Operation enabled	0	
		1	The output voltage is enabled; acceleration of the frequency inverter to the present setpoint.
3	Fault	0	
		1	Drive malfunction and therefore “Nor ready for operation” After acknowledgement, the frequency inverter goes into status "Switch-on inhibit".
4	Voltage enabled	0	“Disable voltage” command present.
		1	
5	Quick stop	0	“Quick stop” command present.
		1	
6	Switch-on inhibit	0	
		1	After the command “Ready for operation” the frequency inverter goes into the status “Ready to switch on”.
7	Warning active	0	
		1	Drive remains in operation; no acknowledgement necessary.
8	Start function 481.9		
			Bus bit 10 of the status word is set 🕮 Parameter **P481** BU0600
9	Bus control enabled	0	
		1	The bus master is requested to take control.
10	Target reached	0	
		1	Target position, target speed or target torque reached
11	Internal limit exceeded	0	
		1	Internal limit for the speed setpoint exceeded
12	Depending on operating modes		See section Operating Modes
13			See section Operating Modes
14	Parameter set Bit 0 On	0	
		1	
15	Parameter set Bit 1 On	0	
		1	

Bit 15	Bit 14	Active parameter set
0	0	Parameter set 1
0	1	Parameter set 2
1	0	Parameter set 3
1	1	Parameter set 4

2.4 Setpoints and actual values

2.4.1 Items

Positions are stated in the parameterised unit (Parameter P55 608Ah). It should be noted that the resolution is 0.001. This means that 1000dec corresponds to one rotation or one metre.

2.4.2 Speeds, acceleration and torque

Speeds, accelerations and torque are entered and processed in the relevant parameter according to the units. For example, speed is stated in rpm.

Torque is stated in percent, whereby in this case a resolution of 0.1 is used.

3 DS402 operating modes

3.1 General

The following five operating modes are available for operation of the NORDAC *PRO* using the DS402 drive profile. The “Homing” mode can be used to perform a reference run for a drive axis. The operating mode “Profile Position” can be used for positioning and orientation control tasks. The “Velocity” and “Profile Velocity” operating modes are used for speed control. The essential difference between these operating modes is that fixed minimum and maximum speeds can be set in the “Velocity” mode. The “Profile Torque” operating mode is used to control the torque of the drive unit. Other DS402 operating modes are not supported.

The operating modes are set via the DS402 object 6060h “Modes of Operation” and are returned via object 6061h “Modes of Operation Display”. The operating mode can be changed while the drive is running.

Further DS402 objects are available for setpoints and actual values in the particular operating modes. It must be noted that each mode of operation uses its own objects, which to some extent overlap.

To a large extent, DS402 objects can be changed via process data telegrams. However, special objects can only be set via SDO messages (see also 🕮 CANopen Manual BU2500) or via NORDCON.

3.2 “Profile Position” operating mode

The function “Profile Position” can be used for positioning and position control tasks. There are several options for processing setpoint values. A target position can be stated either relative to the actual position or as an absolute value. Furthermore, a simple movement order or a series of movement orders can be generated.

A simple movement order is a movement to a target position. The drive then stops at the target position. With a series of movement orders, the subsequent order can be temporarily saved before the first target position is reached. The new target position is then set after the first target position is reached. A target position is considered to be reached if the actual position of the drive is in the target window and the drive is stopped.

In addition, the new target position can be adopted immediately on receipt of a new movement order.

In the “Profile Position” mode, the target position, acceleration and deceleration are not limited in the frequency inverter and must be limited during planning as necessary.

3.2.1 Objects used

NORD Parameters	DS402 object	Parameters	Description
P031	6060h	Modes of operation	Setting of the operating mode to value 1
P046 [-01]	6063h	Position Actual Internal Value	Actual position in increments
P046 [-02]	6064h	Position Actual Value	Actual position
P047 [-01]	6065h	Following Error Window	Maximum permissible deviation of the actual position from the setpoint position
P047 [-02]	6066h	Following Error Time out	Permissible time for slip error
P048 [-01]	6067h	Position Window	Permissible deviation of the actual position relative to the target position in which the target is considered to have been reached.
P048 [-02]	6068h	Position Window Time	Dwell time in the target window so that the target position is considered to have been reached
P049	607Ah	Target position	Target position
P050	607Eh	Polarity	Rotation direction
P051	607Fh	Maximum velocity at pv	Maximum profile speed during a profile movement
P052	6081h	Profile velocity	Required speed with which the position is to be approached.
P065	6083h	Profile acceleration	Required acceleration
P066	6084h	Profile acceleration	Required braking
P067	6085h	Quick stop deceleration	Deceleration on Quick Stop
P053	6086h	Motion profile type	Type of acceleration or deceleration ramp: 0=Linear, 1=sin2
P055	608Ah	Position unit	Setting of the unit for positioning
P056[-01]	6091h	Gear Ratio	Speed ratio
P056[-02]	6091h	Gear Ratio	Negative speed ratio
P057[-01]	6092h	Feed Constant	Feed constant m
P057[-02]	6092h	Feed Constant	Rotations

Table 2: Objects used in the “Profile Position” operating mode

3.2.2 Meaning of bits in the control word

Bit	Description	Value	Control command
4	Start movement order	0 → 1	A rising flank starts a movement order
5	Temporary storage for movement orders	0	A new movement order is only performed after completion of the movement order which is in progress and after the start signal from Bit 4.
		1	A new movement order is performed immediately after the start signal from Bit 4. An existing movement order is aborted.
6	Position absolute/relative	0	The target position is stated as an absolute value.

Table 3: Control word in the “Profile Position” operating mode

3.2.3 Meaning of bits in the status word

Bit	Description	Value	Control command
10	Target position reached	0	Target position not yet reached
		1	The target position has been reached and the motor is at a standstill for a specified time within the tolerance window.
12	Destination for return message	0 → 1	A new valid target point has been received. This bit is set or reset in synchronisation with Bit 4.[1]
13	Slip error	0	Slip error less than the set limits.
		1	In closed loop operation, the slip error has exceeded the set limits.

[1] An exception exists if a new movement is started while another movement is not yet completed and the next movement is only to be performed after completion of the first movement. In this case, the bit is only reset after the command has been accepted and the controller is ready to perform new movement orders. If a new movement order is sent although this bit is still set, the more recent movement order is ignored.

Table 4: Status word in the “Profile Position” operating mode

3.2.4 Signal flow

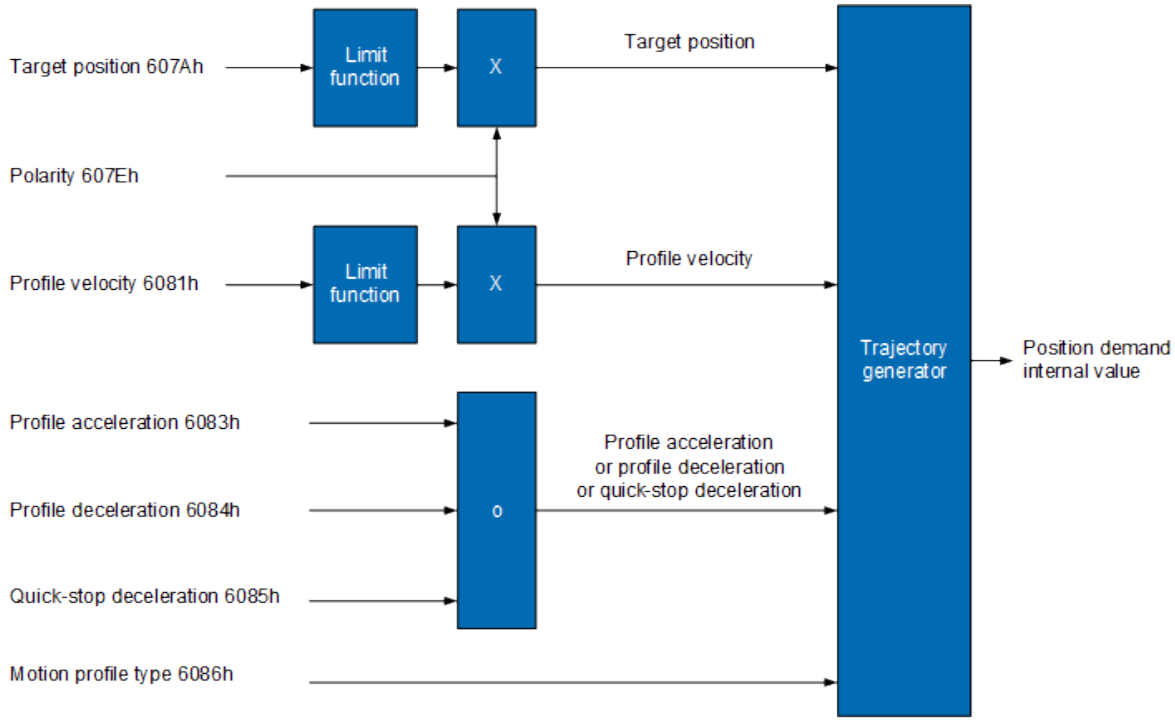

Figure 2: Signal flow in operating mode “Profile Position”

3.2.5 Function description

The most important parameters for use of the mode of operation are available in the standard PDO mapping. In addition to the profile speed 6081h and the target position 607Ah these also include the acceleration 6083h and the deceleration 6084h.

In addition to the setpoint values, Bits 4-6 of the control word must be used.

Simple positioning

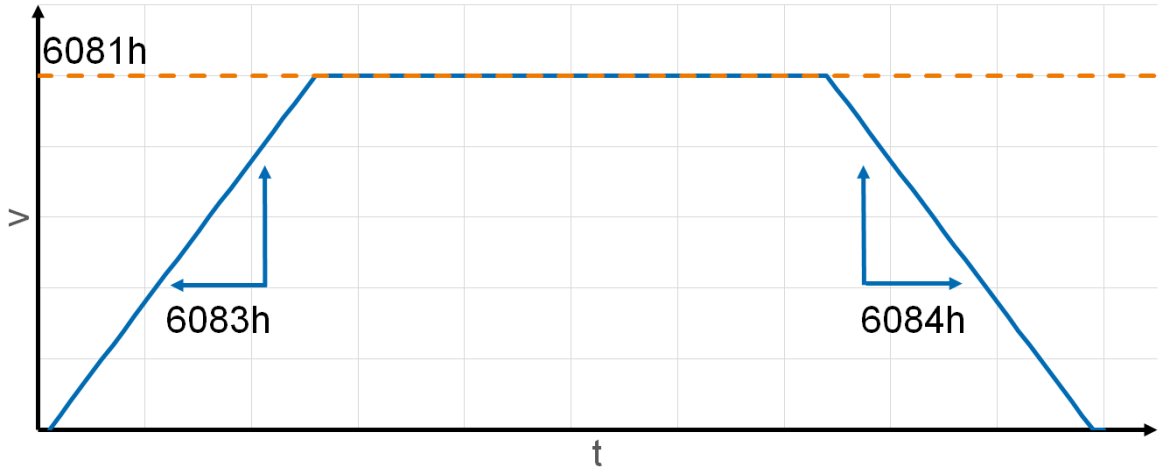

Figure 3: Speed for simple positioning in the “Profile Position” operating mode

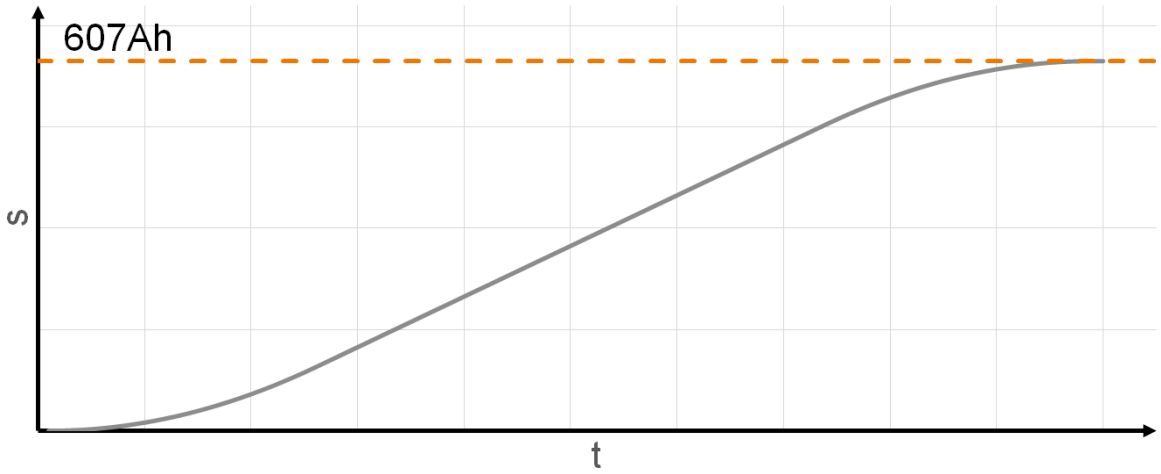

Figure 4: Position for simple positioning in the “Profile Position” operating mode

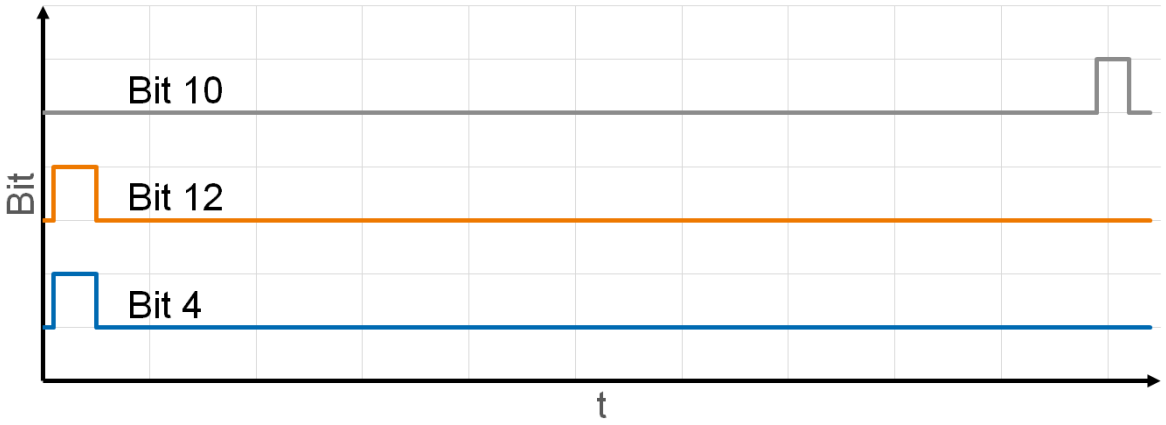

Figure 5: Control bit 4 and status bits 10 and 12 for simple positioning in “Profile Position” operating mode

For simple positioning, the parameters for the movement order are loaded and the movement order is started by setting Bit 4 of the control word. The process is confirmed with Bit 12. The motor initially accelerates to the profile speed (6081h) with the acceleration ramp (6083h). At the end of the movement, the motor decelerates to the target position (607Ah) with the specified braking ramp (6084h). Reaching of the target position is confirmed with Bit 10 of the status word.

Series of movement orders with temporary storage

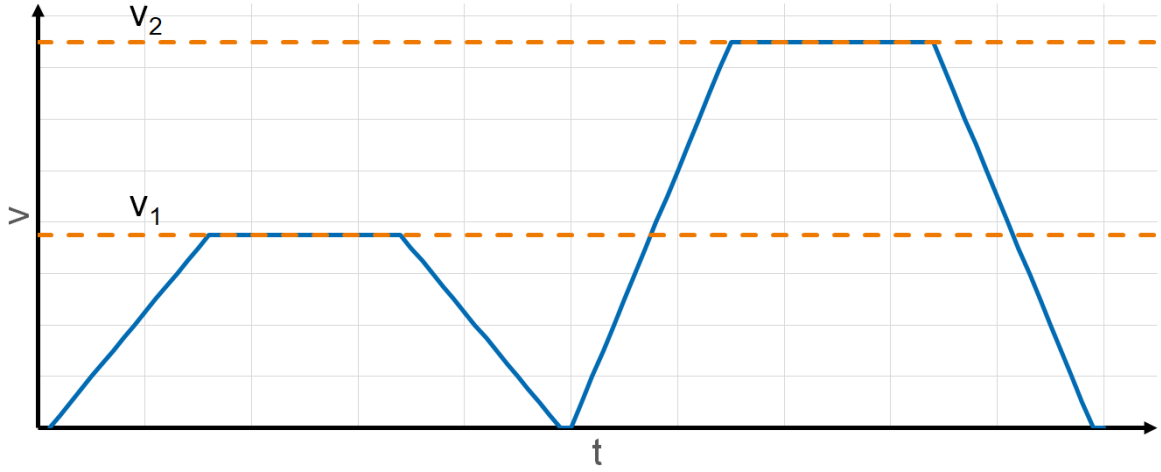

Figure 6: Speed for several movement orders in “Profile Position” operating mode

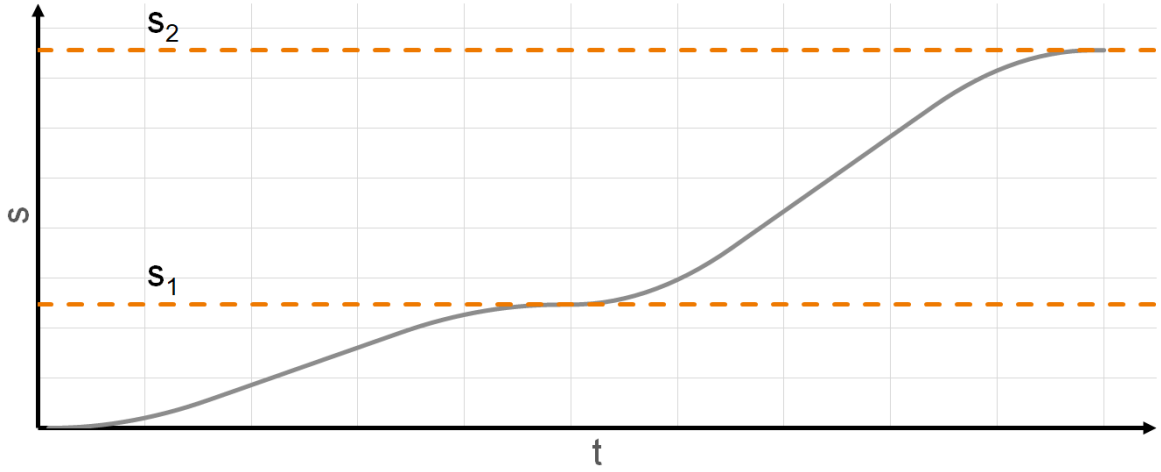

Figure 7: Position for several movement orders in “Profile Position” operating mode

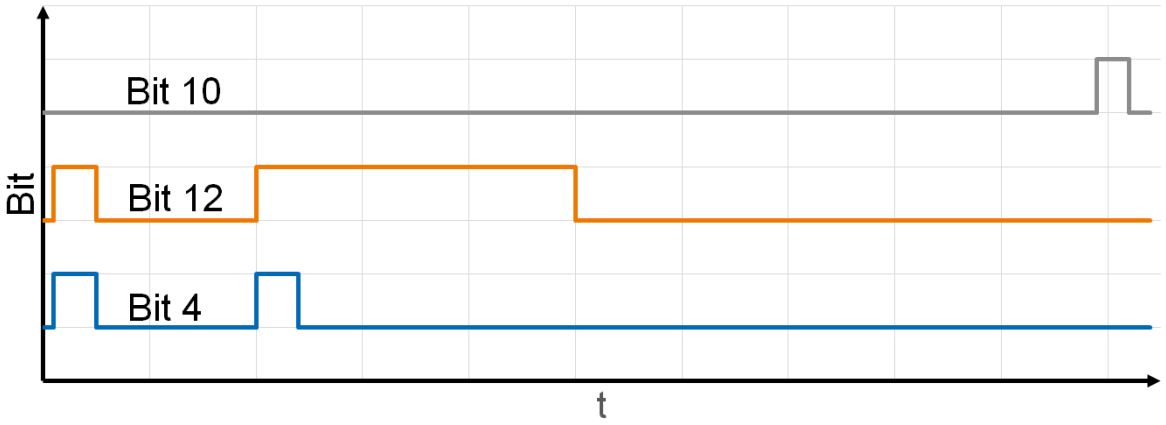

Figure 8: Control bit 4 and status bits 10 and 12 for multiple movement orders in “Profile Position” operating mode

To activate the temporary storage for movement orders, Bit 5 of the control word must be set to 1. The movement order 1 (v_1,s_1) is then loaded and started via Bit 4. The motor then accelerates to the profile speed v_1 (6081h) with the acceleration ramp (6083h). While the motor is still executing movement order 1, movement order 2 (v_2,s_2) is loaded into the temporary storage by setting Bit 4. This process is also confirmed by Bit 12 of the status word. Movement order 2 is only executed after movement order 1 has been completed. Bit 12 is then reset and a new order can be loaded into the temporary storage. After both movement orders have been completed, Bit 10 is set in the status word.

Series of movement orders with direct adoption of the movement orders

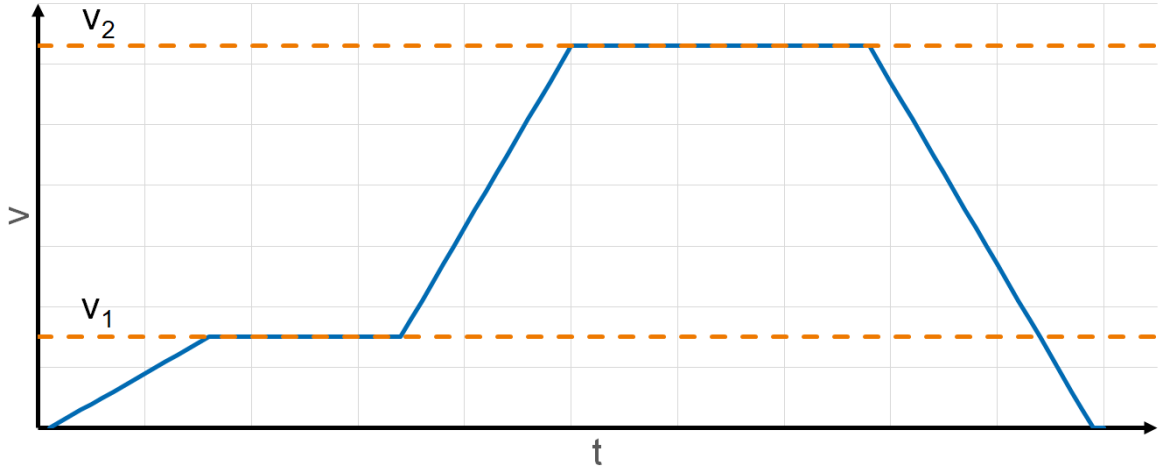

Figure 9: Speed for a series of movement orders in “Profile Position” operating mode

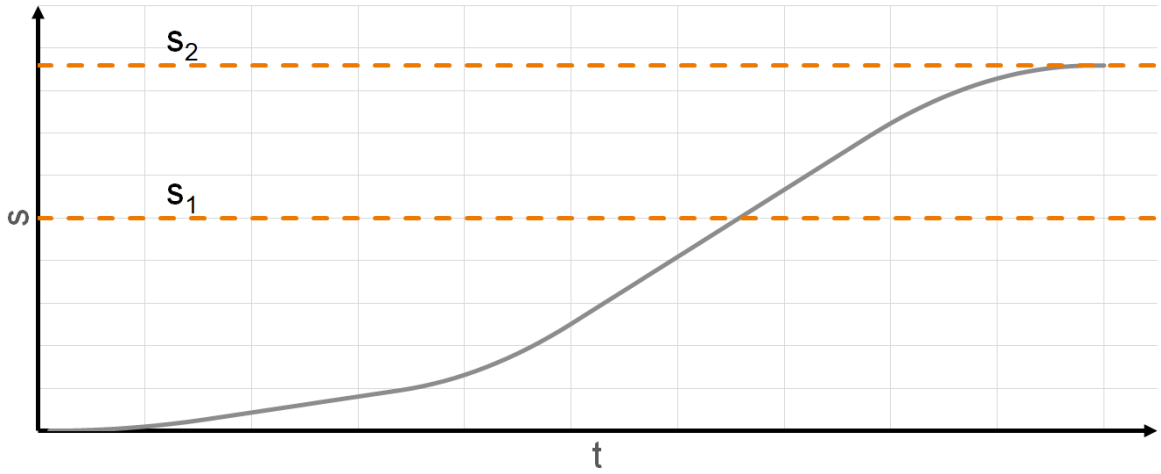

Figure 10: Position for a series of movement orders in “Profile Position” operating mode

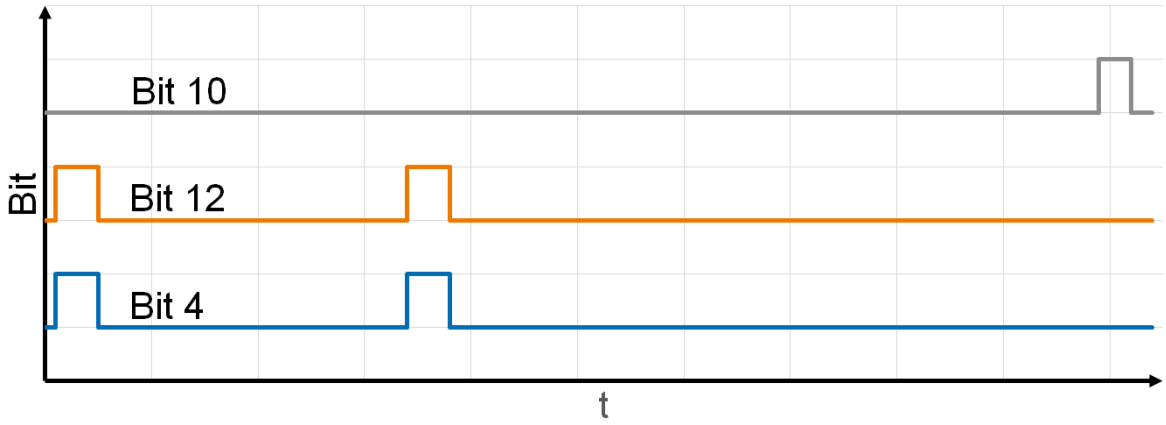

Figure 11: Control bit 4 and status bits 10 and 12 for a series of movement orders in “Profile Position” operating mode

To deactivate the temporary storage of movement orders, Bit 5 of the control word must be set to 0. Movement order 1 (v_1,s_1) is then loaded and started via Bit 4. The motor then accelerates to the profile speed v_1 (6081h) with the acceleration ramp (6083h) While the motor is still executing movement order 1, movement order 2 (v_2, s_2) is loaded and adopted directly. This process is confirmed by Bit 12 of the status word. After movement order 2 has been completed, Bit 10 is set in the status word.

3.3 “Velocity” operating mode

The “Velocity” operating mode is used for speed control of a drive with specification of a target speed and acceleration or deceleration ramps.

3.3.1 Objects used

NORD Parameters	DS402 object	Parameters	Description
P031	6060h	Modes of operation	Setting of the operating mode to value 2
P020	6042h	VI Target velocity	Target speed
P021	6043h	VI Velocity demand	Actual target speed after ramp function
P022	6044h	VI Velocity Actual value	Actual speed
P023 [-01]	6046h [-01]	VI velocity min. amount	Minimum speed in “Velocity” operating mode
P023 [-02]	6046h [-02]	VI velocity max amount	Maximum speed in “Velocity” operating mode
P024 [-01]	6048h [-01]	VI velocity acceleration (delta-N)	Acceleration (delta-N)
P024 [-02]	6048h [-02]	VI velocity acceleration (delta-t)	Acceleration (delta-t)
P025 [-01]	6049h [-01]	VI velocity deceleration (delta-N)	Deceleration (delta-N)
P025 [-02]	6049h [-02]	VI velocity deceleration (delta-t)	Deceleration (delta-t)
P026 [-01]	604Ah [-01]	VI quick-stop (delta-N)	Quick Stop deceleration (delta-N)
P026 [-02]	604Ah [-02]	VI quick-stop (delta-t)	Quick Stop deceleration (delta-t)
P027	6053h	VI Velocity demand in percent	Percentage frequency value after ramp

Table 5: Objects used in the “Velocity” operating mode

3.3.2 Meaning of bits in the control word

Bit	Description	Value	Control command
4	Use setpoint from the bus or local setpoint	0	The setpoint frequency via the parameterised analogue input is used. An analogue input must be parameterised with the “Setpoint frequency” under parameter **P400 [-xx]**.
		1	The speed is controlled according to the ramp function
5	Ramp generator enabled	0	The actual ramp output value is maintained.
		1	The ramp output value is processed according to the setpoint values.
6	Setpoint enabled	0	Present setpoint is set to 0
		1	The setpoint is processed according to the specifications.
8	Stop	0	The motor is accelerated to the target speed with the set acceleration ramp or is running at the target speed.
		1	The motor is braked with the set braking ramp or remains at a standstill.

Table 6: Control word in “Velocity” operating mode

3.3.3 Meaning of bits in the status word

Bit	Description	Value	Control command
10	No meaning	0	
11	Internal limit	0	No limit exceeded.
		1	Internal limit for speed setpoint exceeded or undershot.
12	No meaning	0	
13	No meaning	0	

Table 7: Status word in the “Velocity” operating mode

3.3.4 Signal flow

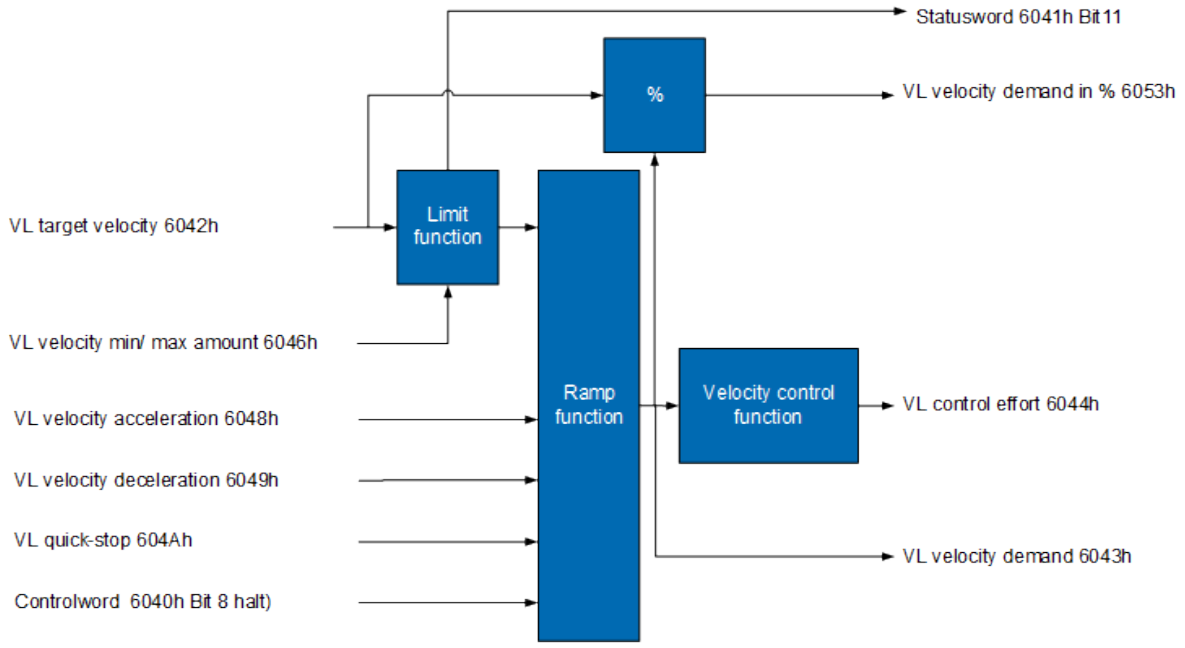

Figure 12: Signal flow in the “Velocity” operating mode

3.3.5 Function description

In the “Velocity” operating mode, a drive is operated according to a speed profile. Setpoints are specified for the target speed 6042h, braking deceleration 6048h and acceleration 6049h.

Linear ramps are available for the braking or acceleration ramps. In addition, the speed can be limited via a minimum 6046:01h and maximum 6046:02h. If the setpoint exceeds the maximum speed, the value is limited to the specified maximum. In the same way, the setpoint is limited to the minimum if the minimum value is undershot.

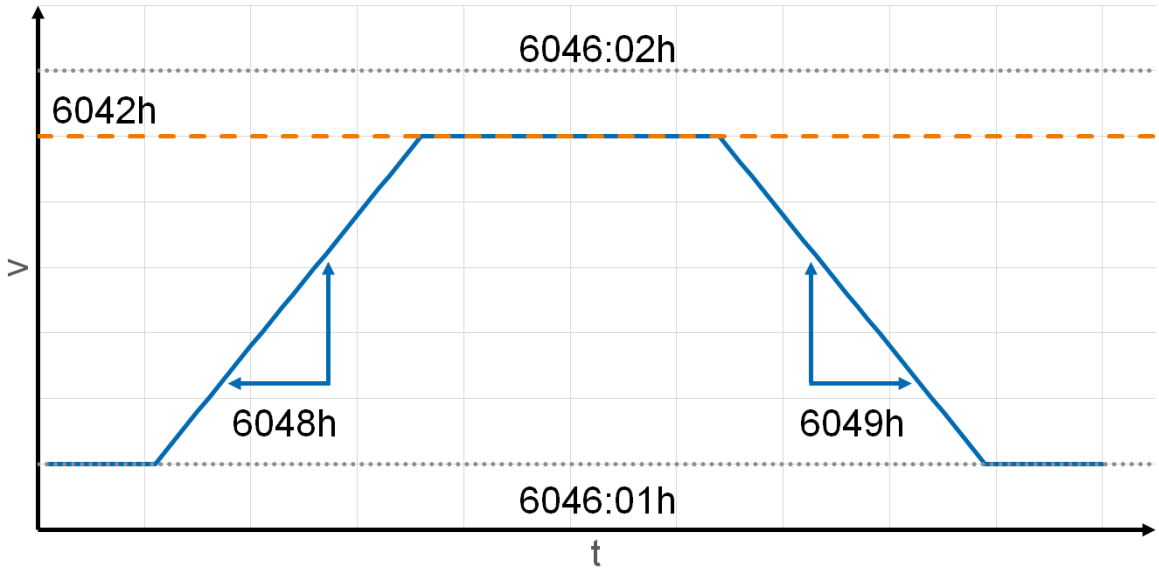

Figure 13: Speed in “Velocity” operating mode

3.4 Operating mode “Profile Velocity”

The “Profile Velocity” operating mode is used to control the speed of the drive unit. The target speed 60FFh is necessary to operate the drive with this mode. In addition, the acceleration ramp 6083h and the deceleration ramp 6084h can be set. Limitation of the maximum range as described in the DS402 profile is not possible.

3.4.1 Objects used

NORD Parameters	DS402 object	Parameters	Description
P031	6060h	Modes of operation	Setting of the operating mode to value 3
P062 [-01]	606Bh	Velocity demand value	Actual speed after ramp. Specification for the speed controller.
P062 [-02]	606Ch	Velocity Actual Value	Actual speed
P063 [-01]	606Dh	Velocity Window	Maximum deviation of the actual speed from the setpoint speed
P063 [-02]	606Eh	Velocity Window Time	Dwell time in the target window so that the target speed is considered to have been reached.
P064 [-01]	606Fh	Threshold Velocity	Permissible deviation of the actual speed relative to speed zero from the time that the drive comes to a standstill.
P064 [-02]	6070h	Threshold Velocity time	Dwell time below the threshold value until Bit 12 “Drive stopped” is set.
P050	607Eh	Polarity	Rotation direction
P065	6083h	Profile acceleration	Required acceleration
P066	6084h	Profile acceleration	Required braking
P067	6085h	Quick stop deceleration	Deceleration on Quick Stop
P053	6086h	Motion profile type	Type of acceleration or deceleration ramp: 0=Linear, 1=sin2
P072	60FFh	Target velocity	Target speed

Table 8: Objects used in the “Profile Velocity” operating mode

3.4.2 Meaning of bits in the control word

Bit	Description	Value	Control command
4	Not used		
5	Not used		
6	Not used		
8	Stop	0	The motor is accelerated to the target speed with the set acceleration ramp or is running at the target speed.
		1	The motor is braked with the set braking ramp or remains at a standstill.

Table 9: Control word in operating mode “Profile Velocity”

3.4.3 Meaning of bits in the status word

Bit	Description	Value	Control command
10	Setpoint speed reached	0	Setpoint speed not yet reached.
		1	Setpoint speed reached
12	Drive stopped	0	The speed has exceeded the threshold value 606Fh for the duration 6070h. The drive is moving.
		1	The speed is below the threshold value 606Fh. The drive is stopped.
13	Slip error	0	No slip error active
		1	Slip error is active

Table 10: Status word in the “Profile Velocity” operating mode

3.4.4 Signal flow

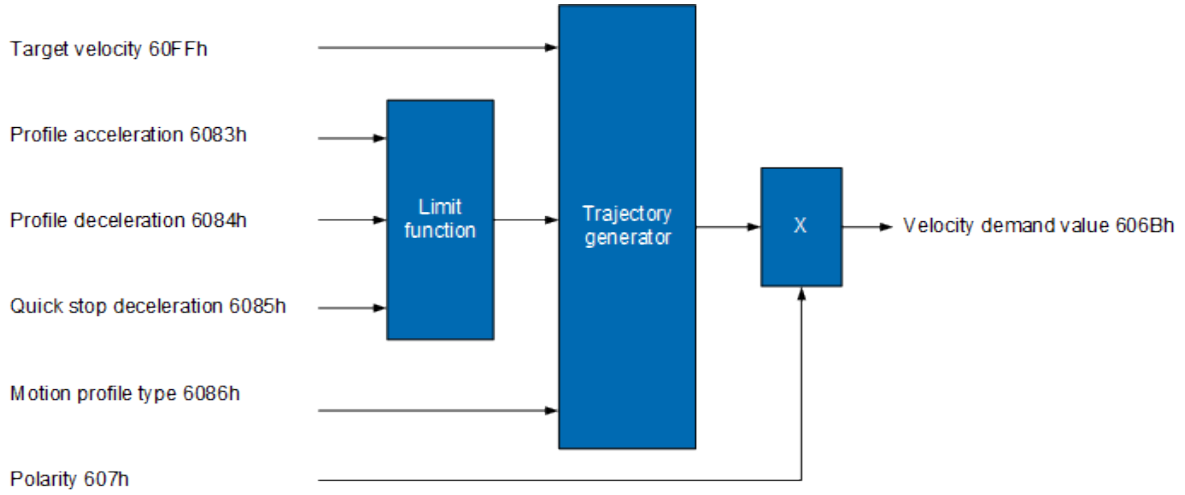

Figure 14: Signal flow in the “Profile Velocity” operating mode

3.4.5 Function description

In the “Profile Velocity” operating mode, a drive is operated according to a speed profile. Essentially, setpoints are specified for the target speed 60FFh, braking deceleration 6084h and acceleration 6083h.

The braking or acceleration ramps can be implemented both as linear or sinusoidal (ramp type 6086h).

In addition, a target window 606Dh for the target speed and a threshold value 606Fh for drive standstill are provided for monitoring of the drive.

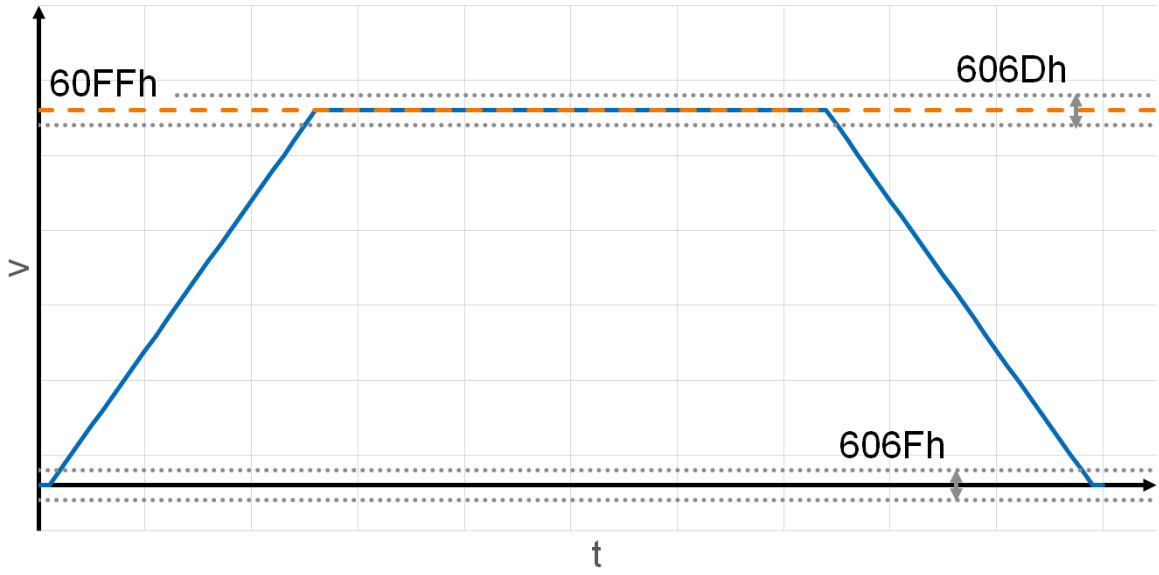

Figure 15: Speed with linear ramp in “Profile Velocity” operating mode

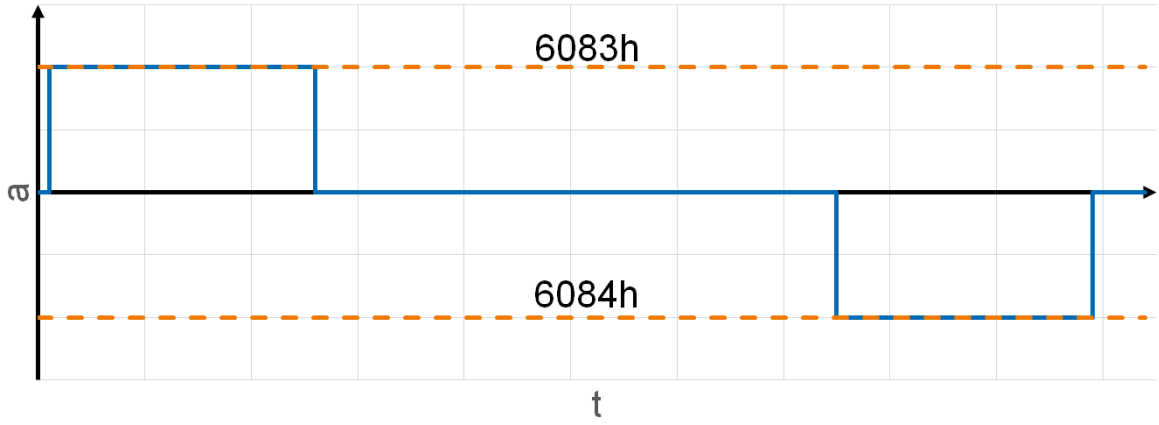

Figure 16: Acceleration with linear ramp in “Profile Velocity” operating mode

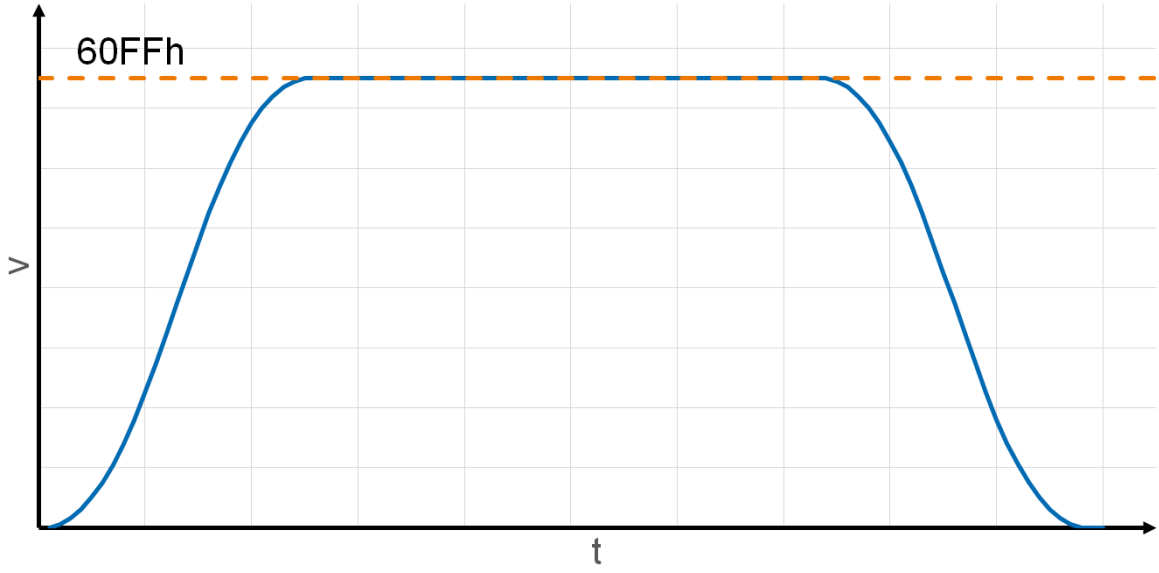

Figure 17: Speed with sinusoidal ramp in “Profile Velocity” operating mode

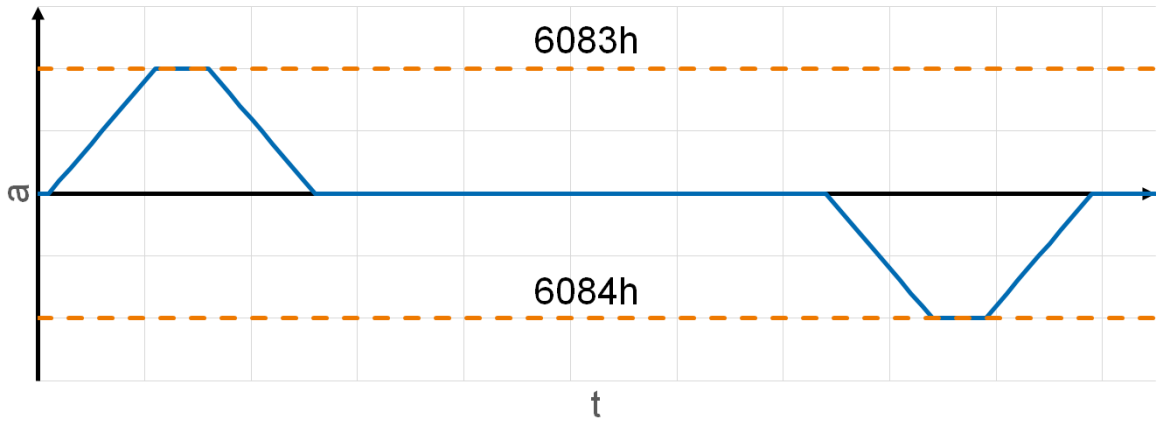

Figure 18: Acceleration with sinusoidal ramp in “Profile Velocity” operating mode

3.5 “Profile Torque” operating mode

In the “Profile Torque” operating mode, a drive is operated with torque control. For this, a torque 6071h and corresponding ramps 6087h are specified.

3.5.1 Objects used

NORD Parameters	DS402 object	Parameters	Description
P031	6060h	Modes of operation	Setting of the operating mode to value 4
P033	6071h	Target Torque	Target torque
P073	6077h	Torque Actual Value	Actual torque as a percentage of the rated torque.
P074	6078h	Current Actual Value	Actual current as a percentage of the rated current
P075	6079h	Intermediate circuit voltage actual value	Actual link circuit voltage
P076	6087h	Torque Slope	Sets the torque ramp

Table 11: Objects used in the “Profile Torque” operating mode

3.5.2 Meaning of bits in the control word

Bit	Description	Value	Control command
4	Not used		
5	Not used		
6	Not used		
8	Stop	0	The motor is accelerated to the target speed with the set acceleration ramp or is running at the target speed.
		1	The motor is braked with the set braking ramp or remains at a standstill.

Table 12: Control word in operating mode “Profile Torque”

3.5.3 Meaning of bits in the status word

Bit	Description	Value	Control command
10	Target reached	0	Target torque not yet reached.
		1	Target torque reached
12	No meaning		
13	No meaning		

Table 13: Status word in the “Profile Torque” operating mode

3.5.4 Signal flow

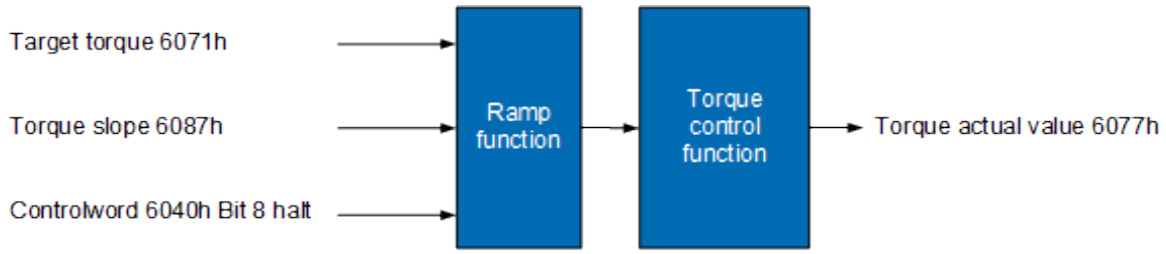

Figure 19: Signal flow in the “Profile Torque” operating mode

3.5.5 Function description

In the “Profile Torque” operating mode, a drive is operated according to a torque profile. Setpoint values are specified for the target torque 6071h and the torque ramp 6087h.

In addition, the function can be monitored via the torque output 6077h and the actual current 6078h.

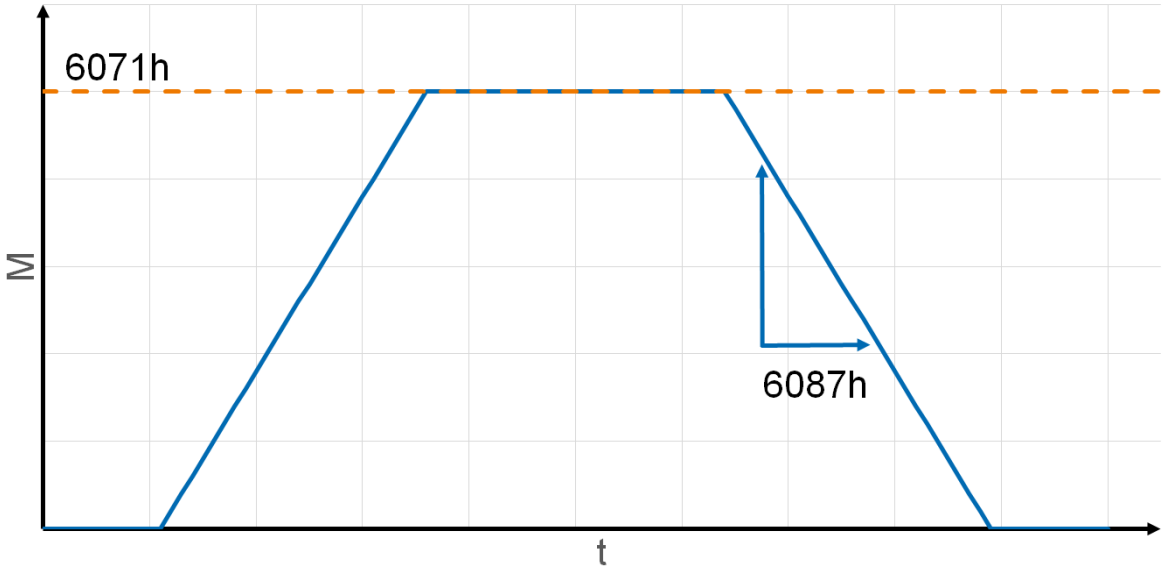

Figure 20: Torque in the “Profile Torque” operating mode

3.6 Operating mode “Homing”

The “Homing” operating mode is used to reference the drive axis to a fixed zero point in the controller. For this, a reference signal from a reference or a limit switch is required. The zero track of an incremental encoder can also be integrated.

3.6.1 Objects used

NORD Parameters	DS402 object	Parameters	Description
P031	6060h	Modes of operation	Setting of the operating mode to value 6
P061	607Ch	Home Offset	States the difference between the zero position of the application and the reference point of the machine.
P058	6098h	Homing Method	Method used for referencing
P059 [-01]	6099h:01h	Speed during search for switch	Speed for the search for the switch or encoder index
P059 [-02]	6099h:02h	Speed during search for zero	Speed for the search for the reference point.
P060	609Ah	Homing acceleration	Acceleration and braking deceleration for the reference run

Table 14: Objects used in the “Homing” operating mode

3.6.2 Meaning of bits in the control word

Bit	Description	Value	Control command
4	Start reference run	0	Stop reference run
		1	Start of reference run
5	No meaning		
6	No meaning		
8	Stop	0	The motor is accelerated to the target speed with the set acceleration ramp or is running at the target speed.
		1	The motor is braked with the set braking ramp or remains at a standstill.

Table 15: Control word in “Homing” operating mode

3.6.3 Meaning of bits in the status word

Description	Status bit		
	13	12	10
Reference run is being executed	0	0	0
Reference run has been interrupted or has not started	0	0	1
Reference run confirmed but target not reached	0	1	0
Reference run completely finished	0	1	1
Error during the reference run, motor still rotating	1	0	0
Error during the reference run, motor at a standstill	1	0	1

Table 16: Status word in the “Homing” operating mode

3.6.4 Function description

Reference or limit switches are required for the “Homing” operating mode. These are set via the digital inputs (parameter P420). Function 31 “Disable right running” (positive limit switch) or “Disable left running” (negative limit switch) are used for this. The reference switch is set via function 23 “Reference point”.

Several methods are available for setting a new reference point. These differ according to the reference signal (positive or negative limit switch, reference switch), in the direction of movement and use of the zero track signal. The methods are set via object 6098h (P058). The speed of the reference run is specified with parameters 6099:01h and 6099:02h

→	Movement distance
1	Reference point incl. details of method used.

Table 17: Meaning of symbols

Reference run to a positive or negative limit switch, with or without consideration of the index pulse (methods 1+2+17+18).

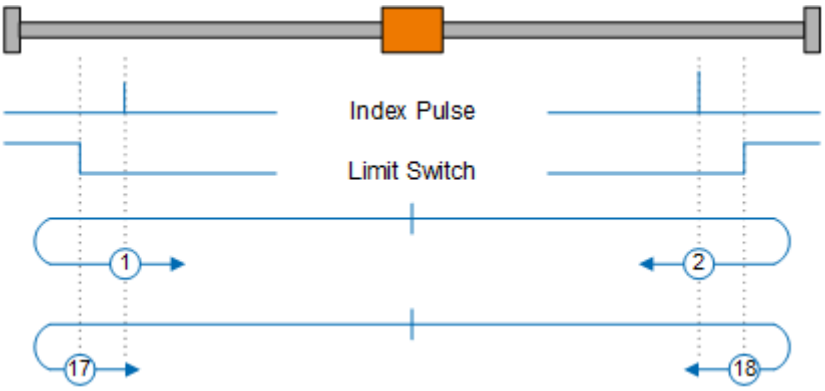

Figure 21: Reference run methods 1, 2, 17 and 18

Reference run to the left hand switching flank of the reference switch with or without consideration of the index pulse (methods 3+4+19+20).

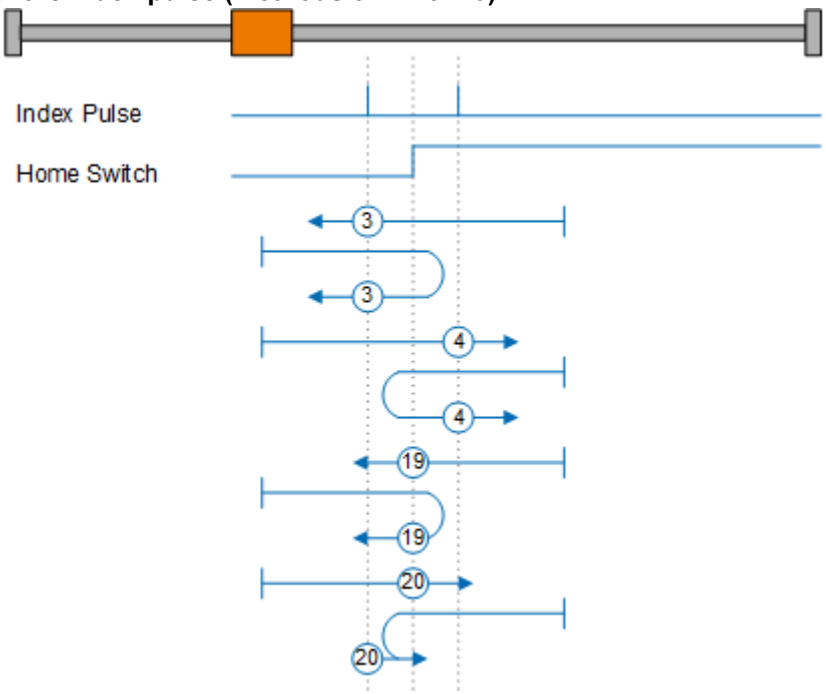

Figure 22: Reference run methods 3, 4, 19 and 20

Reference run to the right hand switching flank of the reference switch with or without consideration of the index pulse (methods 5+6+21+22).

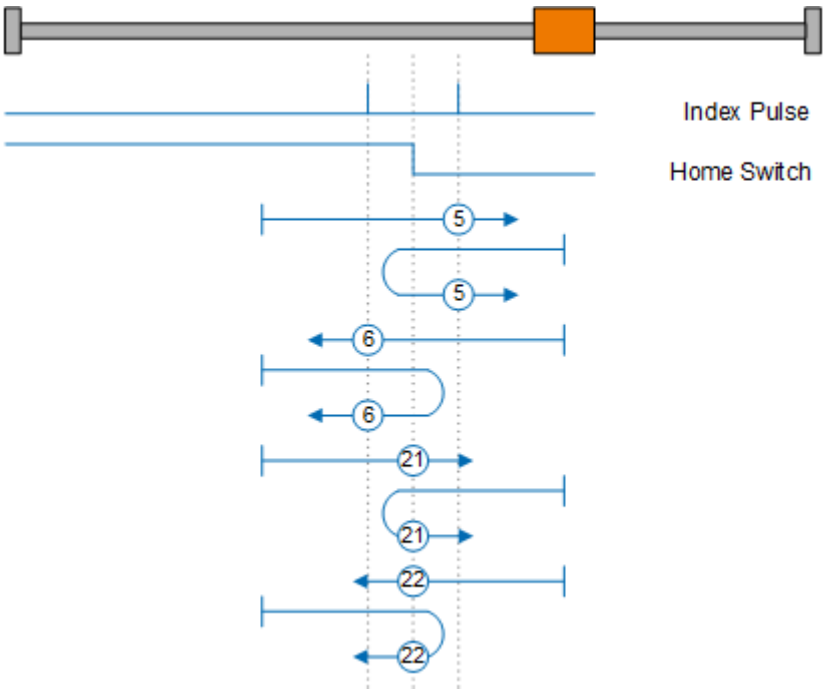

Figure 23: Reference run methods 5, 6, 21 and 22

Reference run to the reference switch with consideration of the index pulse and with limitation of movement by the positive limit switch (methods 7-10).

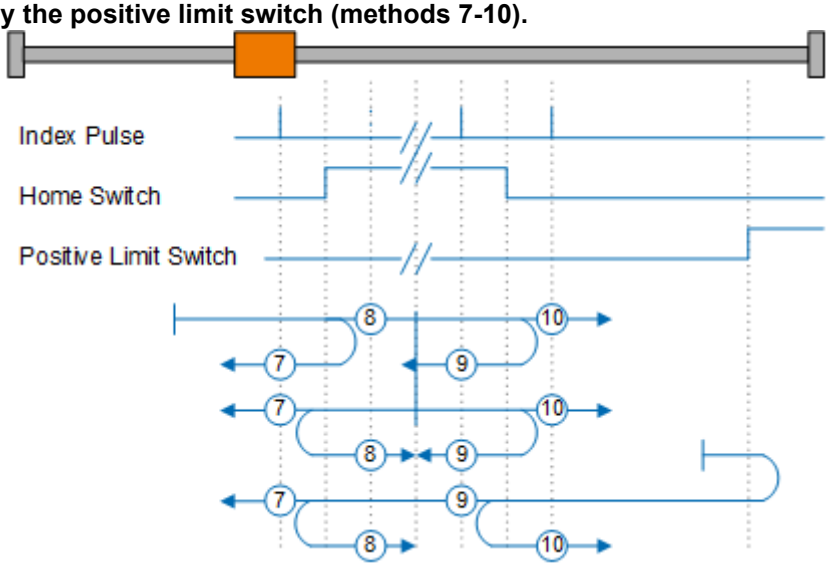

Figure 24: Reference run methods 7 -10

Reference run to the reference switch without consideration of the index pulse and with limitation of movement by the positive limit switch (methods 23-26).

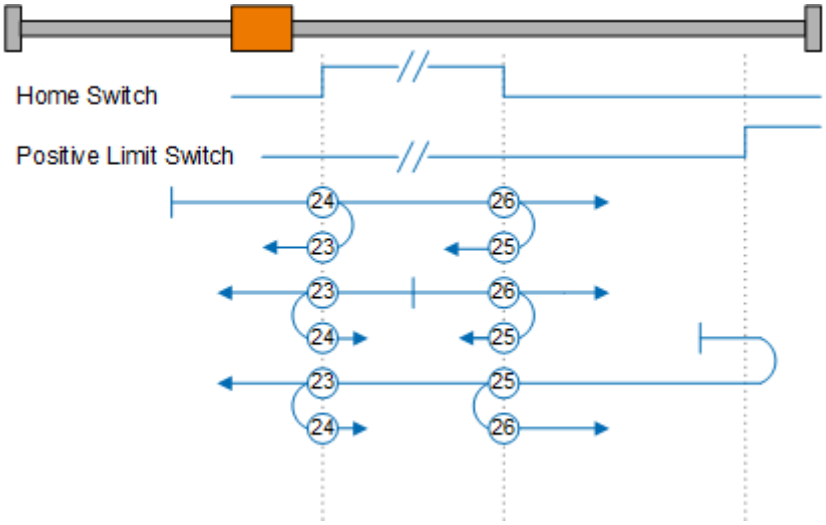

Figure 25: Reference run methods 23 -26

Reference run to the reference switch with consideration of the index pulse and with limitation of movement by the negative limit switch (methods 11-14).

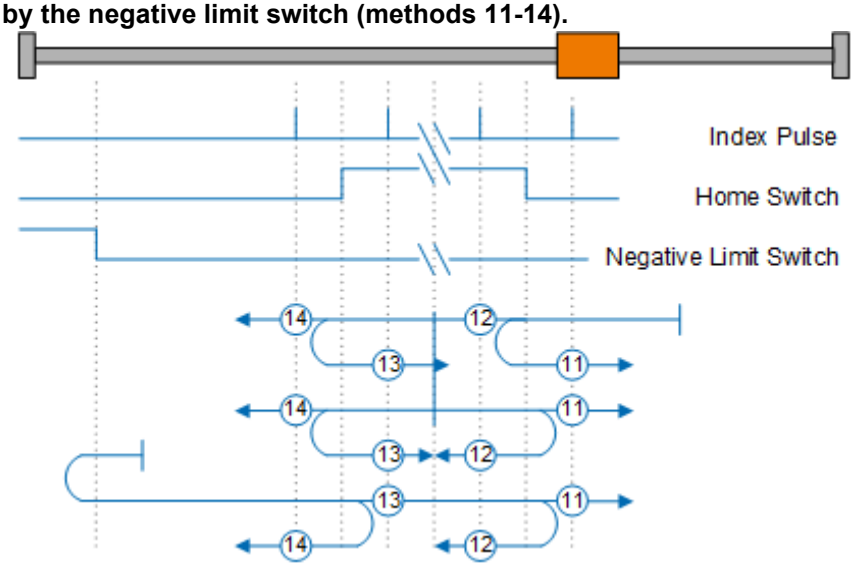

Figure 26: Reference run methods 11 -14

Reference run to the reference switch without consideration of the index pulse and with limitation of movement by the negative limit switch (methods 27-30).

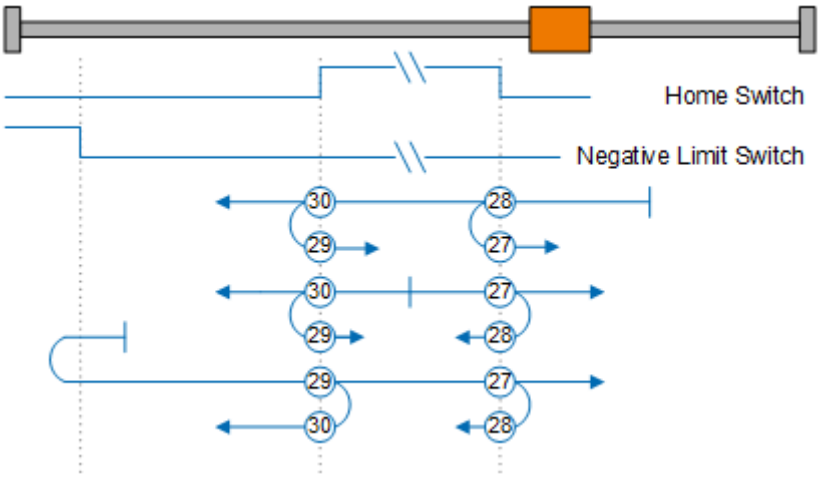

Figure 27: Reference run methods 27 -30

Reference run method 35

The actual position of the drive is set directly as the zero point. The drive does not move.

Reference run methods 15, 16, 31, 32

Referencing method NORD Method 1 without zero pulse evaluation is used.

4 PDO mapping

4.1 Introduction

With the data communication, process data and parameter data are exchanged (via the bus interface) between the frequency inverter and the bus master (PLC).

The process data are transferred via PDOs (Process Data Objects) and the parameters are transferred via SDOs (Service Data Objects).

Special DS402 objects are available for operation of the frequency inverter with the DS402 drive profile. The assignment of these objects in the PDOs is specified via the objects “Receive PDO Mapping Parameter” (Index 1600h…1603h) and “Transmit PDO Mapping Parameter“ (Index 1A00h…1A03h) of the object directory (see also 🕮 BU2500). Up to 4 transmission PDOs (Tx) and 4 reception PDOs (Rx) are available for NORD frequency inverters.

4.2 Standard mapping

Standard mapping is provided in the device description file of the frequency inverter for the individual bus systems. A large number of DS402 operating modes can be used with the aid of this mapping. This mapping is illustrated below.

4.2.1 Received PDO messages

	0	1	2	3	4	5	6	7
RxPDO1 1600h	Control word 6040h		Target speed 6042h		Mode 6060h			
RxPDO2 1601h	Profile acceleration 6083h				Profile deceleration 6084h			
RxPDO3 1602h	Setpoint position 607h				Profile speed 6081h			
RxPDO4 1603h								

4.2.2 Transmitted PDO messages

	0	1	2	3	4	5	6	7
TxPDO1 1A00h	Status word 6041h		Actual speed 6044h		Mode 6061h	Actual torque 6077h		
TxPDO2 1A01h	Actual position 6064h				Actual speed 606C			
TxPDO3 1A02								
TxPDO4 1A03								

4.3 Application-specific mapping

4.3.1 Introduction

In addition to the standard PDO mapping, the data which are to be transmitted can be specified in an application-specific mapping. The procedure for this differs according to the development environment. The general procedure is described below.

4.3.2 Example: Change PDO mapping for TxPDO3

In the cited example, the frequency inverter has the CAN address 20h. This is parameterised by the CAN master via the stated messages

1. Set the NMT status to Pre-operational
2. Deactivate TXPDO3 by setting the Valid Bit (Bit 31) of sub-index 01h of the associated communication parameter (e.g. 1800h:01h) to “1”.

	CAN identifier	**Data**
Transmit	0600h +20h	23 02 18 01 A0 03 00 C0 h
Receive	0580h +20h	60 02 18 01 xx xx xx xx h
Object 1802h, sub-index 1, CAN-ID 3A0h, Bit 30 = 1, Bit 31 = 1		

3. Deactivate the mapping by setting sub-index 00h of the associated mapping parameter (e.g. 1A02h:00h) to “0”.

	CAN identifier	**Data**
Transmit	0600h +20h	2F 02 1A 00 00 xx xx xx h
Receive	0580h +20h	60 02 1A 00 xx xx xx xx h
Object 1A02h, sub-index 0, value = 0		

4. Change the mapping in the required sub-indices (e.g. 1A02h:01h).

	CAN identifier	**Data**
Transmit	0600h +20h	23 02 1A 01 10 00 41 60 h
Receive	0580h +20h	60 02 1A 01 xx xx xx xx h
Set object 1A02h, sub-index 1, to object 6041h, sub-index 0, and 16-Bit data width		

	CAN identifier	**Data**
Transmit	0600h +20h	23 02 1A 02 08 00 61 60 h
Receive	0580h +20h	60 02 1A 02 xx xx xx xx h
Set object 1A02h, sub-index 2, to object 6061h, sub-index 0, and 8-Bit data width		

5. Activate the mapping by writing the number of objects to be mapped in sub-index 00h of the associated mapping parameter (e.g. 1A02h:00h).

	CAN identifier	Data
Transmit	0600h +20h	2F 02 1A 00 02 xx xx xx h
Receive	0580h +20h	60 02 1A 00 xx xx xx xx h
Object 1A02h, sub-index 0, value = 2		

6. Activate the PDO by setting the Bit 31 of sub-index 01h of the associated communication parameter (e.g. 1802h:01h) to “0”.

	CAN identifier	Data
Transmit	0600h +20h	23 02 18 01 A0 03 00 40 h
Receive	0580h +20h	60 02 18 01 xx xx xx xx h
Object 1802h, sub-index 1, CAN-ID 3A0h, Bit 30 = 1, Bit 31 = 0		

7. Set the NMT status to Operational.

5 Example application

5.1 Introduction

In the following, an application is created as an example using DS402. For this, the operating modes “Profile Position” and “Homing” are used. Initially an axis is to be referenced to a point using a reference switch and a limit switch.

After this, the axis is moved to a point in “Profile Position” mode.

5.2 CANopen field bus address

In order for the bus interface and the connected frequency inverter to be recognised by the bus master, the bus address and the baud rate and if necessary the termination resistance (if the bus interface is the last participant on the bus) must be set in the bus interface.

The setting is made using DIP switches (🕮 Technical Information/Data Sheet.)

The address and the baud rate are read in by the bus interface when it is connected to the power supply ("POWER ON").

The set address can be read out via parameter P515 CANopen address, and the set baud rate can be read out via parameter P514 CANopen baud rate (🕮 BU0600).

5.3 Parameterisation of the inverter

5.3.1 General parameters

The most important parameters are stated in the example. Depending on the application, it may be necessary to modify other parameters.

Description	Parameters	Value
Motor data	P2XX	See type plate
Control method	P300	CFC Closed Loop
Encoder resolution	P301	See type plate
Negative limit switch	P420 [-xx]	Disable left running
Positive limit switch	P420 [-xx]	Disable right running
Reference switch	P420 [-xx]	Reference point
Control word source	P509	CANopen
Drive profile	P551	CANopen DS402
Position measurement system:	P604	See type plate
Encoder resolution	P605	See type plate

Table 18: General parameters

5.3.2 DS402 parameters

The most important parameters are stated in the example. Depending on the application it may be necessary to modify other parameters.

Description	Parameters	Value
Minimum speed	P23 [-01]	0
Maximum speed	P23 [-02]	Rated drive speed
For homing mode:		
Homing method	P058	24
Speed 1	P059 [-01]	100 rpm
Speed 2	P059 [-02]	100 rpm
For Profile Position mode		
Rotation direction	P050	0
Ramp type	P053	Linear ramp
Position unit	P055	[0] rotations
Speed ratio	P056 [-01]	1
Negative speed ratio	P056 [-02]	1

Table 19: DS402 parameters

5.4 Axis referencing

The “Homing” method is used to reference the axis. For this, the following RxPDO1 and TxPDO1 messages are transmitted and received. In this example the frequency inverter has the address 20h.

1. Set the inverter to the status “Ready for switch-on”

	CAN identifier	Data
Transmit RxPDO1	0200h +20h	06 00 00 00 06 00 00 00 h
Receive TxPDO1	0180h +20h	31 02 xx xx 06 xx xx h

2. Set the inverter to the status “Switched on”

	CAN identifier	Data
Transmit RxPDO1	0200h +20h	07 00 00 00 06 00 00 00 h
Receive TxPDO1	0180h +20h	33 02 xx xx 06 xx xx h

3. Switch on the inverter

	CAN identifier	Data
Transmit RxPDO1	0200h +20h	0F 00 00 00 06 00 00 00 h
Receive TxPDO1	0180h +20h	37 02 xx xx 06 xx xx h

4. Start reference run

	CAN identifier	Data
Transmit RxPDO1	0200h +20h	1F 00 00 00 06 00 00 00 h
Receive TxPDO1	0180h +20h	37 02 xx xx 06 xx xx h

5. Limit switch actuated but target not yet reached

	CAN identifier	Data
Transmit RxPDO1	0200h +20h	1F 00 00 00 06 00 00 00 h
Receive TxPDO1	0180h +20h	37 12 xx xx 06 xx xx h

6. Reference run ended

	CAN identifier	Data
Transmit RxPDO1	0200h +20h	1F 00 00 00 06 00 00 00 h
Receive TxPDO1	0180h +20h	37 16 xx xx 06 xx xx h

After completion of the reference run a new reference run can be started or the operating mode switched to “Profile Position”.

5.5 Position the axis

The operating mode “Profile Position” is used to position the axis. For this, three reception PDOS PDO RxPDO1, RxPDO2 and RxPDO3 are required. These contain the control word is 6040h, the operating mode 6060h, the acceleration 6083h, the deceleration 6084h, the setpoint position 607Ah and the profile speed 6081h.

The messages are sent as follows for the task:

1. Set acceleration to 750 rpm/s

	CAN identifier	Data
Transmit RxPDO2	0300h +20h	EE 02 00 00 EE 02 00 00 h

2. Set the inverter to the status “Ready for switch-on”

	CAN identifier	Data
Transmit RxPDO1	0200h +20h	06 00 00 00 01 00 00 00 h
Receive TxPDO1	0180h +20h	31 02 xx xx 01 xx xx h

3. Set the inverter to the status “Switched on”

	CAN identifier	Data
Transmit RxPDO1	0200h +20h	07 00 00 00 01 00 00 00 h
Receive TxPDO1	0180h +20h	33 02 xx xx 01 xx xx h

4. Switch on the inverter and wait for movement order

	CAN identifier	Data
Transmit RxPDO1	0200h +20h	0F 00 00 00 01 00 00 00 h
Receive TxPDO1	0180h +20h	37 02 xx xx 01 xx xx h

5. Transmit movement order with target position 200,000 rev and speed 1000 rpm.

	CAN identifier	Data
Transmit RxPDO3	0400h +20h	03 D0 90 00 E8 03 00 00 h

6. Start movement order

	CAN identifier	Data
Transmit RxPDO1	0200h +20h	1F 00 00 00 01 00 00 00 h
Receive TxPDO1	0180h +20h	37 12 00 00 01 00 00 h

7. The target position is reached and a new target position can be set

	CAN identifier	Data
Transmit RxPDO1	0200h +20h	0F 00 00 00 01 00 00 00 h
Receive TxPDO1	0180h +20h	37 02 00 00 01 00 00 h

8. Target position reached

	CAN identifier	Data
Transmit RxPDO1	0200h +20h	0F 00 00 00 01 00 00 00 h
Receive TxPDO1	0180h +20h	37 06 00 00 01 00 00 h

6 DS402 parameters

Information

For parameters **P046**, **P047**, **P048**, **P056**, **P057**, **P062**, **P063** and **P064** the precise designations can be obtained from the arrays. These parameters are indicated with an exclamation mark (!) in the top line.

P020	**6042 Target velocity**			**S**
Setting range	-24000... 24000 rpm			
Factory setting	{ 0 }			
PDO mapping	RxPDO			
Data type	INTEGER 16Bit			
Description	DS402 object 6042h: Target speed in “Velocity” operating mode.			

P021	**6043 Velocity demand**			**S**
Display range	-32768...32767 rpm			
Factory setting	{ 0 }			
PDO mapping	TxPDO			
Data type	INTEGER 16Bit			
Description	DS402 object 6043h: Actual target speed after the ramp function in “Velocity” operating mode.			

P022	**6044 Control effort**			**S**
Display range	-32768...32767 rpm			
Factory settings	{ 0 }			
PDO mapping	TxPDO			
Data type	INTEGER 16Bit			
Description	DS402 object 6044h: Present actual speed in “Velocity” mode.			

P023	**6046 Velocity amount**			**S**
Setting range	[-01] =	0... 24000 rpm	[-02] =	1... 24000 rpm
Arrays	[-01] =	Minimum speed	[-02] =	Maximum speed
Factory setting	[-01] =	{ 0 }	[-02] =	{ 1500 }
PDO mapping	[-01] =	No	[-02] =	No
Data type	[-01] =	UNSIGNED 32Bit	[-02] =	UNSIGNED 32Bit
Description	DS402 object 6046h: Minimum or maximum speed in “Velocity” mode.			

P024	**6048 Velocity accele**			**S**
Setting range	[-01] =	1... 2400000 rpm	[-02] =	0... 32767 sec
Arrays	[-01] =	Delta-N acceleration	[-02] =	Delta-T acceleration
Factory setting	[-01] =	{ 1500 }	[-02] =	{ 2 }
PDO mapping	[-01] =	No	[-02] =	No
Data type	[-01] =	UNSIGNED 32 Bit	[-02] =	UNSIGNED 16 Bit
Description	DS402 object 6048h: Acceleration ramp in “Velocity” mode.			

P025	6049 Velocity decele				S
Setting range	[-01] =	1... 2400000 rpm	[-02] =	0... 32767 sec	
Arrays	[-01] =	Delta-N braking	[-02] =	Delta-T braking	
Factory setting	[-01] =	{ 1500 }	[-02] =	{ 2 }	
PDO mapping	[-01] =	No	[-02] =	No	
Data type	[-01] =	UNSIGNED 32 Bit	[-02] =	UNSIGNED 16 Bit	
Description	DS402 object 6049h: Braking ramp in “Velocity” operating mode.				

P026	604A Velocity qStop				S
Setting range	[-01] =	1... 2400000 rpm	[-02] =	0... 32767 sec	
Arrays	[-01] =	Delta-N Quick stop	[-02] =	Delta-T Quick stop	
Factory setting	[-01] =	{ 1500 }	[-02] =	{ 1 }	
PDO mapping	[-01] =	No	[-02] =	No	
Data type	[-01] =	UNSIGNED 32 Bit	[-02] =	UNSIGNED 16 Bit	
Description	DS402 object 604Ah: Braking ramp when quick stop is triggered in “Velocity” operating mode				

P027	6053 Percent demand	S
Display range	-32768... 32767 (-200%... 200%)	
Factory setting	{ 0 }	
PDO mapping	TxPDO	
Data type	INTEGER 16Bit	
Description	DS402 object 6053h: Actual target speed in percentage of the setpoint value after the ramp function in “Velocity” mode.	

P028	6040 Controlwort	S
Setting range	-32768 … 32767	
Factory setting	{ 0 }	
PDO mapping	RxPDO	
Data type	INTEGER 16Bit	
Description	DS402 object 6040h: Control word for control of the frequency inverter in the DS402 drive profile.	

P029	6041 Statuswort	S
Display range	-32768 … 32767	
Factory setting	{ 0 }	
PDO mapping	TxPDO	
Data type	INTEGER 16 Bit	
Description	DS402 object 6041h: The status word shows the actual status of the frequency inverter in the DS402 drive profile.	

P030	605D Stop opt. code			S
Setting range	0 … 2			
Factory setting	{ 2 }			
PDO mapping	No			
Data type	INTEGER 16 Bit			
Description	DS402 object 605Dh: Setting of the behaviour if Bit 8 “Stop” is set in the control word.			
Setting values	Value	Function	Description	
	0	Disable voltage	The frequency inverter output voltage is switched off; the motor runs down freely.	
	1	Brake ramp P025	The frequency inverter reduces the frequency according to the braking ramp from **P025**.	
	2	Quick stop P026	The frequency inverter reduces the frequency according to the quick stop ramp from **P026**.	

P031	6060 Modes of operat			S
Setting range	-1 … 6			
Factory setting	{ 2 }			
PDO mapping	RxPDO			
Data type	INTEGER 8 Bit			
Description	DS402 object 6060h: Setting of the operating mode in the DS402 drive profile.			
Setting values	Value	Function	Description	
	-1	NORD Mode	NORD standard mode	
	0	Reserved		
	1	Profile Position	Position and orientation control	
	2	Velocity mode	Speed control with minimum and maximum speeds	
	3	Profile Velocity	Speed control without minimum and maximum speeds	
	4	Profile Torque	Torque control	
	5	Reserved		
	6	Homing mode	Reference run	

P032	6061 Modes of op.Dis			S
Display range	-1 … 6			
Factory setting	{ 3 }			
PDO mapping	TxPDO			
Data type	INTEGER 8 Bit			
Description	DS402 object 6061h: Display of the actual operating mode in the DS402 drive profile.			
Setting values	Value	Function	Description	
	-1	NORD Mode	NORD standard mode	
	0	Reserved		
	1	Profile Position	Position and orientation control	
	2	Velocity mode	Speed control with minimum and maximum speeds	
	3	Profile Velocity	Speed control without minimum and maximum speeds	
	4	Profile Torque	Torque control	
	5	Reserved		
	6	Homing mode	Reference run	

P033	6071 Target torque			S
Setting range	-400 … 400 %			
Factory setting	[-01] =	{ 100 }		
PDO mapping	RxPDO			
Data type	INTEGER 16 Bit			
Description	DS402 object 6071h: Target torque for “Profile Torque” operating mode.			

P034	60FD Digital inputs			S
Display range	-2147483648 … 2147483647			
Factory setting	{ 0 }			
PDO mapping	TxPDO			
Data type	INTEGER 32 Bit			
Description	DS402 object 60FDh: Displays the actual status of the digital inputs.			
Setting values	**Value**	**Function**	**Description**	
	Bit: 0	Negative limit switch	Negative limit switch	
	Bit: 1	Positive limit switch	Positive limit switch	
	Bit: 2	Home switch	Reference switch	
	Bit: 3	… 15: reserved		
	Bit: 16	Bus/ 2nd IOE Dig In1		
	Bit: 17	Digital input 2 (DI2)		
	Bit: 18	Digital input 3 (DI3)		
	Bit: 19	Digital input 4 (DI4)		
	Bit: 20	Digital input 5 (DI5)		
	Bit: 21	Digital input 6 (DI6)		
	Bit: 22	Digital input 7 (DI7)		
	Bit: 23	Digital input 8 (DI8)		
	Bit: 24	Digital input 9 (DI9)		
	Bit: 25	Digital input 10 (DI10)		
	Bit: 26	Digital input 11 (DI11)		
	Bit: 27	Digital input 12 (DI12)		
	Bit: 28	Digital function, analogue input 1 (AI1)		
	Bit: 29	Digital function, analogue input 2 (AI2)		

P035	60FE Digital outputs			S
Setting range	-2147483648 … 2147483647			
Factory setting	{ 0 }			
PDO mapping	RxPDO			
Data type	INTEGER 32 Bit			
Description	DS402 object 60FEh: The digital outputs of the frequency inverter can be set with this object.			
Setting values	**Value**	**Function**	**Description**	
	Bit: 0	Set brake	Brake control	
	Bit: 1	… 15 reserved		
	Bit: 16	Multi-function relay 1 (K1)		
	Bit: 17	Multi-function relay 2 (K2)		
	Bit: 18	Digital output 1 (DO1)		
	Bit: 19	Digital output 2 (DO2)		
	Bit: 20	Digital output 3 (DO3)		
	Bit: 21	Digital output 4 (DO4)		
	Bit: 22	Digital output 5 (DO5)		
	Bit: 23	Digital output 6 (DO6)		
	Bit: 24	Analogue output 1 (AO1) - digital function AO1		

P046	6063 & 6064 Akt. Position				!	S
Display range	[-01] =	-2147483648 … 2147483647 inc	[-02] =	-2147483.648 … 2147483.647 rev		
Arrays	[-01] =	6063 Akt. Pos Inc.	[-02] =	6064 Akt. Position		
Factory setting	[-01] =	{ 0 }	[-02] =	{ 0 }		
PDO mapping	[-01] =	TxPDO	[-02] =	TxPDO		
Data type	[-01] =	INTEGER 32 Bit	[-02] =	INTEGER 32 Bit		
Description	[-01] =	DS402 object 6063h: Shows the actual position as an incremental value	[-02] =	DS402 object 6064h: Shows the actual position in rotations.		

P047	6065 & 6066 Slip error				!	S
Arrays	[-01] =	6065 Follow err wind	[-02] =	6066 Follow timeout		
Setting range	[-01] =	0 … 2147483.647 rev	[-02] =	0... 32767 ms		
Factory setting	[-01] =	{ 0 }	[-02] =	{ 200 }		
PDO mapping	[-01] =	No	[-02] =	No		
Data type	[-01] =	UNSIGNED 32 Bit	[-02] =	UNSIGNED 16 Bit		
Description	[-01] =	DS402 object 6065h: Maximum permissible deviation of the actual position from the setpoint position.	[-02] =	DS402 object 6066h: Permissible time for a slip error.		

P048	6067 & 6068 target window				!	S
Arrays	[-01] =	6067 Position window	[-02] =	6068 Pos wind timeout		
Setting range	[-01] =	0 … 2147483.647 rev	[-02] =	0... 32767 ms		
Factory setting	[-01] =	{ 0.1 }	[-02] =	{ 200 }		
PDO mapping	[-01] =	No	[-02] =	No		
Data type	[-01] =	UNSIGNED 32 Bit	[-02] =	UNSIGNED 16 Bit		
Description	[-01] =	DS402 object 6067h: Permissible deviation of the actual position relative to the target position in which the target is considered to have been reached.	[-02] =	DS402 object 6068h: Dwell time in the target window so that the target position is considered to have been reached.		

P049	607A Target position	S
Setting range	-2147483.648 … 2147483.647 rev	
Factory setting	{ 0 }	
PDO mapping	RxPDO	
Data type	INTEGER 32 Bit	
Description	DS402 object 607Ah: Position setpoint in “Profile Position” operating mode.	

P050	607E Polarity	S
Setting range	0 … 192	
Factory setting	{ 0 }	
PDO mapping	No	
Data type	UNSIGNED 8 Bit	
Description	DS402 object 607Eh: Setting of encoder polarity	
Setting values		

Value	Function	Description
Bit 0	… 5 reserved	
Bit 6	Inverse speed polarity	0 = Direction reversal disabled, 1 = Direction reversal enabled
Bit 7	Inverse position polarity	

P051	607F Max pro velocit		S
Setting range	0... 24000 rpm		
Factory setting	{ 1500 }		
PDO mapping	No		
Data type	UNSIGNED 32 Bit		
Description	DS402 object 607Fh: Maximum profile speed in “Profile Position” and “Profile Velocity” operating modes.		

P052	6081 Profile velocit		S
Setting range	0... 24000 rev		
Factory setting	{ 1500 }		
PDO mapping	RxPDO		
Data type	UNSIGNED 32 Bit		
Description	DS402 object 6081h: Speed setpoint in “Profile Position” and “Profile Velocity” modes.		

P053	6086 Motion pro type		S
Setting range	0 … 1		
Factory setting	{ 0 }		
PDO mapping	No		
Data type	INTEGER 16 Bit		
Description	DS402 object 6086h: Type of acceleration or deceleration ramps in “Profile Position” and “Profile Velocity” operating modes.		
Setting values	Value	Function	Description
	0	Linear ramp	
	1	$\sin^2$ ramp	

P055	608A Pos dimension		S
Setting range	0 … 1		
Factory setting	{ 0 }		
PDO mapping	No		
Data type	UNSIGNED 8 Bit		
Description	DS402 object 608Ah: Setting of the unit.		
Setting values	Value	Function	Description
	0	rev [rotations]	
	1	m [Metre	

P056	6091 Gear ratio			!	S
Arrays	[-01] =	6091_1 Gear ratio	[-02] =	6091_2 Gear ratio	
Setting range	[-01] =	1... 2147483647	[-02] =	1... 2147483647	
PDO mapping	[-01] =	No	[-02] =	No	
Data type	[-01] =	UNSIGNED 32 Bit	[-02] =	UNSIGNED 32 Bit	
Factory setting	[-01] =	{ 1 }	[-02] =	{ 1 }	
Description	DS402 object 6091h: Sets the speed ratio and speed reduction ratio				

P057	**6092 Feed constant**				**!**	**S**
Arrays	[-01] =	6092_1 feed constant	[-02] =	6092_2 feed constant		
Setting range	[-01] =	1 … 2147483647 m	[-02] =	1 … 2147483647 rev		
Factory setting	[-01] =	{ 1 }	[-02] =	{ 10 }		
PDO mapping	[-01] =	No	[-02] =	No		
Data type	[-01] =	UNSIGNED 32 Bit	[-02] =	UNSIGNED 32 Bit		
Description	DS402 object 6092h: Sets the feed constants.					
Note	The values are only taken into account in scaling if in **P055** “*DS402 Position dimension*” (608A) the setting value “*Metres*“ is selected.					

P058	6098 Homing method			S
Setting range	0 … 35			
Factory setting	{ 0 }			
PDO mapping	No			
Data type	INTEGER 8 Bit			
Description	DS402 object 6098h: Setting of the required reference run method.			
Setting values	**Value**	**Function**	**Description**	

0	No reference run	No reference run
1	Reference run to negative limit switch taking the index pulse into account.	
2	Reference run to positive limit switch taking the index pulse into account.	
3	Reference run to the left falling switching flank of the reference switch, taking the index pulse into account	
4	Reference run to the left rising switching flank of the reference switch, taking the index pulse into account	
5	Reference run to the right falling switching flank of the reference switch, taking the index pulse into account	
6	Reference run to the right rising switching flank of the reference switch, taking the index pulse into account	
7	Reference run to the left falling flank of the reference switch with consideration of the index pulse and limitation of movement by the positive limit switch	
8	Reference run to the left rising flank of the reference switch with consideration of the index pulse and limitation of movement by the positive limit switch	
9	Reference run to the right rising flank of the reference switch with consideration of the index pulse and limitation of movement by the positive limit switch	
10	Reference run to the right falling flank of the reference switch with consideration of the index pulse and limitation of movement by the positive limit switch	
11	Reference run to the right falling flank of the reference switch with consideration of the index pulse and limitation of movement by the positive limit switch	
12	Reference run to the right rising flank of the reference switch with consideration of the index pulse and limitation of movement by the negative limit switch	
13	Reference run to the left rising flank of the reference switch with consideration of the index pulse and limitation of movement by the negative limit switch	
14	Reference run to the left falling flank of the reference switch with consideration of the index pulse and limitation of movement by the negative limit switch	
15	Reserved	
16		
17	Reference run to negative limit switch without taking the index pulse into account.	
18	Reference run to positive limit switch without taking the index pulse into account.	
19	Reference run to the left falling switching flank of the reference switch without taking the index pulse into account	
20	Reference run to the left rising switching flank of the reference switch without taking the index pulse into account	
21	Reference run to the right falling switching flank of the reference switch without taking the index pulse into account	
22	Reference run to the right rising switching flank of the reference switch without taking the index pulse into account	
23	Reference run to the left falling flank of the reference switch without consideration of the index pulse and with limitation of movement by the positive limit switch	
24	Reference run to the left rising flank of the reference switch without consideration of the index pulse and with limitation of movement by the positive limit switch	
25	Reference run to the right rising flank of the reference switch without consideration of the index pulse and with limitation of movement by the positive limit switch	
26	Reference run to the right falling flank of the reference switch without consideration of the index pulse and with limitation of movement by the positive limit switch	
27	Reference run to the right falling flank of the reference switch without consideration of the index pulse and with limitation of movement by the positive limit switch	
28	Reference run to the right rising flank of the reference switch without consideration of the index pulse and with limitation of movement by the negative limit switch	
29	Reference run to the left rising flank of the reference switch without consideration of the index pulse and with limitation of movement by the negative limit switch	
30	Reference run to the right falling flank of the reference switch without consideration of the index pulse and with limitation of movement by the negative limit switch	
31	Reserved	
…		
34		
35	The actual position of the drive is set directly as the zero point.	

P059	6099 Ref. Pt. for speed				S
Arrays	[-01] =	6099 Ref. Pt. for speed [1]	[-02] =	6099 Ref. Pt. for speed [2]	
Setting range	[-01] =	0 … 24000 rpm	[-02] =	0 … 24000 rpm	
PDO mapping	[-01] =	No	[-02] =	No	
Data type	[-01] =	UNSIGNED 32 Bit	[-02] =	UNSIGNED 32 Bit	
Factory setting	[-01] =	{ 30 }	[-02] =	{ 30 }	
Description	[-01] =	DS402 object 6099h: Setpoint speed for reference run to the limit switch.	[-02] =	DS402 object 6099h: Setpoint speed for reference run to the limit switch	

P060	609A Homing accelera	S
Setting range	0 … 2147483647 rpm/s	
Factory setting	{ 750 }	
PDO mapping	No	
Data type	UNSIGNED 32 Bit	
Description	DS402 object 609Ah: Acceleration and braking deceleration in “Homing” operating mode	

P061	607C Homing offset	S
Setting range	-2147483.648 … 2147483.647 rev	
Factory setting	{ 0 }	
PDO mapping	No	
Data type	INTEGER 32 Bit	
Description	DS402 object 607Ch: States the difference between the zero position of the application and the reference point of the machine.	

P062	606B & 606C & 6069 Velocity actual	!	S
Display range	-2147483.648 … 2147483647 rpm		
Arrays	[-01] =	606B Velocity demand	
	[-02] =	606C Velocity actual	
	[-03] =	6069 Actual encoder speed.	
Factory setting	All	{ 0 }	
PDO mapping	[-01] =	No	
	[-02] =	TxPDO	
	[-03] =	No	
Data type	All	INTEGER 32 Bit	
Description	[-01] =	DS402 object 606Bh: Present actual speed in “Profile Velocity” operating mode.	
	[-02] =	DS402 object 606Ch: Actual speed after the ramp function in “Profile Velocity” operating mode.	
	[-03] =	DS402 object 6069h: Actual encoder speed in “Profile Velocity” operating mode.	

P063	606D & 606E Velocity window				!	S
Setting range	[-01] =	0 … 24000 rpm	[-02] =	0 … 32767 ms		
Arrays	[-01] =	606D Velocity window	[-02] =	606E Veloc wind time		
Factory setting	[-01] =	{ 100 }	[-02] =	{ 200 }		
PDO mapping	[-01] =	No	[-02] =	No		
Data type	[-01] =	UNSIGNED 16 Bit	[-02] =	UNSIGNED 16 Bit		
Description	[-01] =	DS402 object 606Dh: Permissible deviation of the actual speed relative to the target speed in which the speed is considered to have been reached. Applies for “Profile Velocity” mode.				
	[-02] =	DS402 object 6068h: Dwell time in the target window so that the target velocity is considered to have been reached. Applies for “Profile Velocity” mode.				
Description	Sets target window for velocity and time					

P064	606F & 6070 Velocity thresh				!	S
Arrays	[-01] =	606F Velocity thresh	[-02] =	6070 Veloc thre time		
Setting range	[-01] =	0 … 24000 rpm	[-02] =	0 … 32767 ms		
Factory setting	[-01] =	{ 100 }	[-02] =	{ 200 }		
PDO mapping	[-01] =	No	[-02] =	No		
Data type	[-01] =	UNSIGNED 16 Bit	[-02] =	UNSIGNED 16 Bit		
Description	[-01] =	DS402 object 606Fh: Permissible deviation of the actual velocity relative to velocity zero. If the drive undershoots this threshold value beyond the dwell time, Bit 12 of the status word is set. Applies for “Profile Velocity” operating mode.				
	[-02] =	DS402 object 6070h: Dwell time below the threshold value until Bit 12 “Drive stopped” is set. Applies for “Profile Velocity” mode.				

P065	6083 Prof accelerat		S
Setting range	0... 2147483647 rpm/s		
Factory setting	{ 750 }		
PDO mapping	RxPDO		
Data type	UNSIGNED 32 Bit		
Description	DS402 object 6083h: Acceleration in “Profile Position” and “Profile Velocity” modes.		

P066	6084 Prof decelerat		S
Setting range	0... 2147483647 rpm/s		
Factory setting	{ 750 }		
PDO mapping	RyPDO		
Data type	UNSIGNED 32 Bit		
Description	DS402 object 6084h: Deceleration in “Profile Position” and “Profile Velocity” modes.		

P067	6085 qStop decelerat		S
Setting range	0... 2147483647 rpm/s		
Factory setting	{ 15000 }		
PDO mapping	RxPDO		
Data type	UNSIGNED 32 Bit		
Description	DS402 object 6085h: Quick stop deceleration in “Profile Position” and “Profile Velocity” modes.		

P072	60FF Target Velocity	S
Setting range	-24000... 24000 rpm	
Factory setting	{ 0 }	
PDO mapping	RxPDO	
Data type	INTEGER 32 Bit	
Description	DS402 object 60FFh: Target speed in “Profile Velocity” operating mode.	

P073	6077 Torque act val	S
Display range	-400... 400 %	
Factory setting	{ 0 }	
PDO mapping	TyPDO	
Data type	INTEGER 16 Bit	
Description	DS402 object 6077h: Actual torque as percentage of rated torque in “Profile Torque” mode.	

P074	6078 Current act val	S
Display range	-300... 300 %	
Factory setting	{ 0 }	
PDO mapping	TxPDO	
Data type	INTEGER 16 Bit	
Description	DS402 object 6078h: Actual current as percentage of the rated current in “Profile Torque” mode.	

P075	6079 DC link cir vol	S
Display range	0... 1200 V	
Factory setting	{ 0 }	
PDO mapping	No	
Data type	UNSIGNED 32 Bit	
Description	DS402 object 6079h: Actual link circuit voltage	

P076	6087 Torque ramp	S
Setting range	0... 1000000 %/s	
Factory setting	{ 10000 }	
PDO mapping	No	
Data type	UNSIGNED 32 Bit	
Description	DS402 object 6087h: Sets the torque ramp	

Key word index

Headquarters
Getriebebau NORD GmbH & Co. KG
Getriebebau-Nord-Str. 1
22941 Bargteheide, Deutschland
T: +49 45 32 / 289 0
F: +49 45 32 / 289 22 53
info@nord.com

6047802 / 3023